Physical Evidence Handbook

Washington State Patrol
Forensic Laboratory Services Bureau
Phone: (206) 262-6000

3000-210-463 June 21, 2006

TABLE OF CONTENTS

CRIME LABORATORY DIVISION — SECTION ONE

ACKNOWLEDGMENTS I

PREFACE II

INTRODUCTION III

CRIME LABORATORIES AND SERVICES IV

PROCEDURES FOR EVIDENCE SUBMISSION 1-1

- SHIPPING 1-1
- PERSONAL DELIVERY 1-2
- REQUEST FOR LABORATORY EXAMINATION (FORM 3000-210-005) 1-2

GENERAL GUIDELINES FOR THE COLLECTION, PRESERVATION, AND PACKAGING OF PHYSICAL EVIDENCE 2-1

- PRECAUTIONS 2-1
- GENERAL GUIDELINES 2-2
- HOW TO MAKE A PAPERFOLD 2-5

CRIME SCENE RESPONSE TEAM 3-1

- INTRODUCTION 3-1
- GOAL AND OBJECTIVES 3-1
- CALLOUT CRITERIA 3-1
- CALLOUT PROCEDURE 3-2
- RELATIONSHIP TO REQUESTING AGENCY 3-3

BIOLOGICAL FLUIDS AND STAINS 4-1

- HANDLING OF BIOLOGICAL FLUIDS AND STAINS – UNIVERSAL PRECAUTIONS 4-1
- SIGNIFICANCE OF BIOLOGICAL STAINS 4-2
- CRIME SCENE SEARCH 4-2
- COLLECTION, PRESERVATION, AND SHIPPING 4-2
- THE CONVICTED FELON PROGRAM 4-4
- DNA REFERENCES IN A MISSING BODY CASE 4-5

COLLECTION OF PHYSICAL EVIDENCE FROM VICTIMS OF SEXUAL ASSAULT 5-1

COLLECTION OF PHYSICAL EVIDENCE BY MEDICAL PERSONNEL 5-1

TRACE EVIDENCE 6-1

INTRODUCTION 6-1
PRECAUTIONS 6-1
HAIR 6-3
GLASS 6-4
CONTROL/REFERENCE SAMPLES - GLASS 6-6
CLOTHING AND FIBERS 6-7
CONTROL/REFERENCE SAMPLES – FABRIC AND FIBERS 6-9
PAINT AND OTHER PROTECTIVE COATINGS 6-9
CONTROL/REFERENCE SAMPLES - PAINT 6-11
VEHICLE LAMP EVIDENCE 6-11
IMPRESSION EVIDENCE 6-13
CONTROL/REFERENCE SAMPLES - IMPRESSIONS 6-15

FIREARMS EVIDENCE 7-1

INTRODUCTION 7-1
PRECAUTIONS 7-1
SIGNIFICANCE 7-2
COLLECTION AND PRESERVATION 7-2
UNLOADING A REVOLVER 7-3
UNLOADING A SEMI-AUTOMATIC PISTOL 7-4
RECOVERED BULLETS, PROJECTILES, AND FRAGMENTS 7-4
FIRED CARTRIDGE CASES AT SCENE 7-4
POWDER PATTERN EXAMINATION 7-5
FIREARM PARTS 7-5
SERIAL NUMBER RESTORATION 7-5
SHIPPING FIREARMS AND RELATED EVIDENCE 7-6

TOOL MARK EVIDENCE 8-1

INTRODUCTION 8-1
TYPES OF TOOLMARKS 8-1
PRECAUTIONS 8-1
PRESERVATION OF TOOLMARKS 8-2
TOOL FRAGMENTS 8-2

INTEGRATED BALLISTIC IDENTIFICATION SYSTEM (IBIS) EVIDENCE 9-1

SUBMISSIONS FOR IBIS ENTRY 9-1
FIREARMS 9-1
CARTRIDGE CASES 9-1

FORENSIC DOCUMENT EVIDENCE 10-1

INTRODUCTION 10-1
SIGNIFICANCE 10-1
STRUCTURE OF EXAMINATION 10-1
HANDLING AND SHIPPING OF EVIDENCE 10-2
HANDWRITING STANDARDS 10-2

LATENT PRINTS EVIDENCE 11-1

INTRODUCTION 11-1
PRECAUTIONS 11-1
COLLECTION, HANDLING, AND PACKAGING OF EVIDENCE 11-1

CONTROLLED SUBSTANCES EVIDENCE 12-1

PRECAUTIONS 12-1
FIELD TESTS 12-1
PLANT MATERIAL 12-2
SOLID DOSAGE FORMS AND POWDERS 12-3
LIQUID SAMPLES 12-3
PROCEDURES FOR DRUG EVIDENCE RETRIEVED FROM BODY CAVITIES ... 12-3
DISPOSAL OF CONTROLLED SUBSTANCES 12-4

CLANDESTINE LABORATORY ANALYSIS 13-1

COLLECTION OF EVIDENCE AT A CLANDESTINE LABORATORY 13-2
SPECIAL NOTE ON HANDLING ANHYDROUS AMMONIA 13-2

FIRE DEBRIS EVIDENCE 14-1

INTRODUCTION 14-1
PRECAUTIONS 14-1
SIGNIFICANCE 14-2
COLLECTION 14-2
PACKAGING 14-4
CONTROLS/COMPARISON 14-5
ADDRESSES FOR KAPAK AND GRAND RIVER PRODUCTS 14-5

EXPLOSIVES 15-1

INTRODUCTION 15-1
BULK EXPLOSIVES 15-1
POST-BLAST DEBRIS 15-1
COMPONENTS OF EXPLOSIVE DEVICES AND DEACTIVATED DEVICES 15-1
COLLECTION AND PACKAGING OF EXPLOSIVES EVIDENCE 15-2

APPENDIX A —

STANDARD EMERGENCY MEDICAL PROTOCOLS
ESTABLISHED FOR VICTIMS OF SEXUAL ASSAULT A-1

APPENDIX B —

REQUEST FOR LABORATORY EXAMINATION FORM (3000-210-005)

TOXICOLOGY LABORATORY DIVISION — SECTION TWO

LAB ADDRESS I

PREFACE II

INTRODUCTION III

STATE TOXICOLOGY LABORATORY 1

GUIDELINES FOR SAMPLE SELECTION 1

SAMPLE COLLECTION KITS AND GENERAL SHIPPING INFORMATION 1

DRIVING UNDER THE INFLUENCE AND DRE SAMPLES 3

DECEASED SUBJECTS 4

BLOOD 4
URINE 5
VITREOUS/AQUEOUS HUMOR 5

DRUG FACILITATED SEXUAL ASSAULTS 6

BLOOD 8
URINE 8

APPENDIX 10

REQUESTS FOR ANALYSIS - TOXICOLOGY

A DEATH INVESTIGATION

B DRUG FACILITATED SEXUAL ASSAULT

C DRIVING UNDER THE INFLUENCE/DRE

D L.C.B./DRUG INVESTIGATION

SECTION ONE

CRIME LABORATORY DIVISION

ACKNOWLEDGMENTS

The compilation of a publication such as this with its many technical requirements is a formidable task, certainly an effort that is beyond the reasonable capability of a single person. Thus, we acknowledge and thank the following for their valuable contributions of time and energy, as well as other equally valuable resources:

- The many forensic scientists in our crime laboratories who contributed their knowledge and experience;

- The headquarters staff of the Forensic Laboratory Services Bureau for their unflagging support, advice, and patience;

- ~~The State Criminal Justice Training Commission for their support in the production and distribution of this handbook;~~

- And, finally, the word processors and proofreaders whose skills and sharp eyes were much in need.

PREFACE

Technological advances have created a need for a revision of the *Physical Evidence Handbook*. We are now able to conduct examinations that were not developed when the earlier editions were published—for example, DNA analysis on much smaller evidence. Other examinations have been refined and improved through better instrumentation, such as glass and paint analysis. It is important that the investigator be aware of the changes in evidence collection and handling which result from these technical gains.

The handbook is organized to provide the following:

- A description of services provided by the crime laboratories.
- General guidelines for the collection, preservation, and packaging of physical evidence.
- The procedure for submitting physical evidence.
- Procedures for handling various types of physical evidence.

This handbook is not meant to be a comprehensive reference source for the collection and handling of physical evidence. An attempt has been made to briefly highlight the basic principles and requirements for dealing with the more common evidence types. The handbook cannot replace the caution, care, and probing reflection that are the requisites of the thorough, successful investigator. The investigator is encouraged throughout the handbook to call the crime laboratory for assistance. This is probably the best advice that we can provide: The wise investigator seeks counsel.

INTRODUCTION

The Forensic Laboratory Services Bureau of the Washington State Patrol, with bureau headquarters in Seattle, consists of three divisions: the Crime Laboratory Division, the Toxicology Laboratory Division and the Impaired Driving Division ~~Implied Consent Division~~. The Crime Laboratory Division consists of laboratories in Seattle, Spokane, Tacoma, Marysville, Vancouver, Kennewick, and the Latent Prints Laboratory in Olympia. ~~four full-service laboratories in Seattle, Spokane, Tacoma, and Marysville; two limited service laboratories in Kelso and Kennewick; and the Latent Prints Laboratory in Olympia.~~ All forensic toxicology services for the State of Washington are conducted at the Toxicology Laboratory located in Seattle. See the Toxicology Laboratory manual for guidance on collection and submission of samples for this division.

The Washington State Patrol Crime Laboratories are mandated by the Legislature to provide criminal justice agencies within the state the scientific investigative support associated with matters of a criminal nature.

Evidence from all types of crimes is accepted from local, county, and state law enforcement agencies. Other agencies are assisted on a cooperative basis when a special need arises.

The Washington State Patrol Crime Laboratories are responsible for providing scientific support and expert testimonies relating to physical evidence from crimes by:

- Assisting at the scenes of crimes.
- Performing scientific examinations and evaluations of physical evidence in order to provide information relevant to criminal investigations.
- Assisting prosecuting attorneys by participating in pretrial consultations and by providing reports, charts, graphs, and other exhibits.
- Providing expert testimony in court trials, hearings, and depositions.
- Providing training to the criminal justice community in crime scene investigation, the role and significance of physical evidence, and the handling, collection, preservation, and packaging of physical evidence.

CRIME LABORATORIES AND SERVICES

FORENSIC LABORATORY SERVICES BUREAU – DR. BARRY LOGAN

2203 Airport Way S, Suite 360
Seattle, WA 98134
Telephone: (206) 262-6000
FAX: (206) 262-6018

CRIME LABORATORY DIVISION – MR. LARRY HEBERT

2203 Airport Way S, Suite 250
Seattle, WA 98134
Telephone: (206) 262-6002
FAX: (206) 262-6018

LABORATORIES

- Seattle Crime Laboratory – ~~Ms. Lynn McIntyre~~ Mr. Jim Tarver

  2203 Airport Way S, Suite 250
  Seattle, WA 98134
  Telephone: (206) 262-6020
  FAX: (206) 262-6033

  Services: Bio/DNA analysis
  Clandestine lab response
  Crime scene response
  Explosives analysis
  Fire debris analysis
  Firearms/tool marks examination
  Integrated Ballistics Information System (IBIS)
  Forensic chemistry
  Clandestine lab analysis
  Controlled substances analysis
  Microanalysis (trace evidence)
  Questioned Documents

- Spokane Crime Laboratory – Mr. Kevin Fortney

  ~~Public Safety Building, Room 100~~ 580 W 7th St
  ~~W 1100 Mallon Ave~~ Cheney WA 99004
  ~~Spokane WA 99201~~
  Telephone~~: (509) 456-4144~~ (509) 625-5401
  FAX~~: (509) 456-4051~~ (509) 624-5440

  Services: Bio/DNA analysis
  Clandestine lab response
  Crime scene response
  Explosives analysis
  Fire debris analysis
  Firearms/toolmarks examination
  Integrated Ballistics Information System (IBIS)
  Forensic chemistry
  Clandestine lab analysis
  Controlled substances analysis
  Microanalysis (trace evidence)

- Tacoma Crime Laboratory – Mr. Kevin Jones

  2502 112th St E
  Tacoma WA 98445
  Telephone: (253) 536-4280
  FAX: (253) 536-4290

  Services: Bio/DNA analysis
  Clandestine lab response
  Crime scene response
  Explosives analysis
  Fire debris analysis
  Firearms/toolmarks examination
  Integrated Ballistics Information System (IBIS)
  Forensic chemistry
  Clandestine lab analysis
  Controlled substances analysis
  Microanalysis (trace evidence)

- Marysville Crime Laboratory – Mr. Erik Neilson

  2700 116th St NE, Suite P
  Marysville WA 98271
  Telephone: (360) 651-6503
  FAX: (360) 651-6506

  Services: Bio/DNA analysis
  Clandestine lab response
  Explosives analysis
  Fire debris analysis
  Forensic chemistry
  Clandestine lab analysis
  Controlled substances analysis
  Microanalysis (trace evidence)

- ~~Kelso~~ Vancouver Crime Laboratory – Mr. Ken McDermott

  ~~312 SW 1st Ave~~ 1401 Kauffman Ave
  ~~PO Box 888~~ Vancouver WA 98660
  ~~Kelso WA 98626~~
  ~~Telephone: (360) 577-2087~~ (360) 993-3800
  ~~FAX: (360) 577-2095~~ (360) 993-3899

  Services: ~~Biological screening~~ Bio/DNA analysis
  Clandestine lab response
  Fire debris analysis
  Forensic chemistry
  Clandestine lab analysis
  Controlled substances analysis

- Kennewick Crime Laboratory – Mr. Charles Solomon

  143302 E Law Ln
  Kennewick WA 99337
  Telephone: (509) 734-7022
  FAX: (509) 734-7025

  Services: ~~Biological screening~~
  Controlled substance analysis
  Clandestine lab analysis

- Latent Prints Laboratory – ~~Ms. Cheryl Rivers~~ Mr. Randy Watson

  3310 Capitol Blvd
  PO Box 42608
  Olympia WA 98504
  Telephone: (360) 705-5988
  FAX: (360) 705-5795

  Services: Crime scene response
  Latent prints analysis

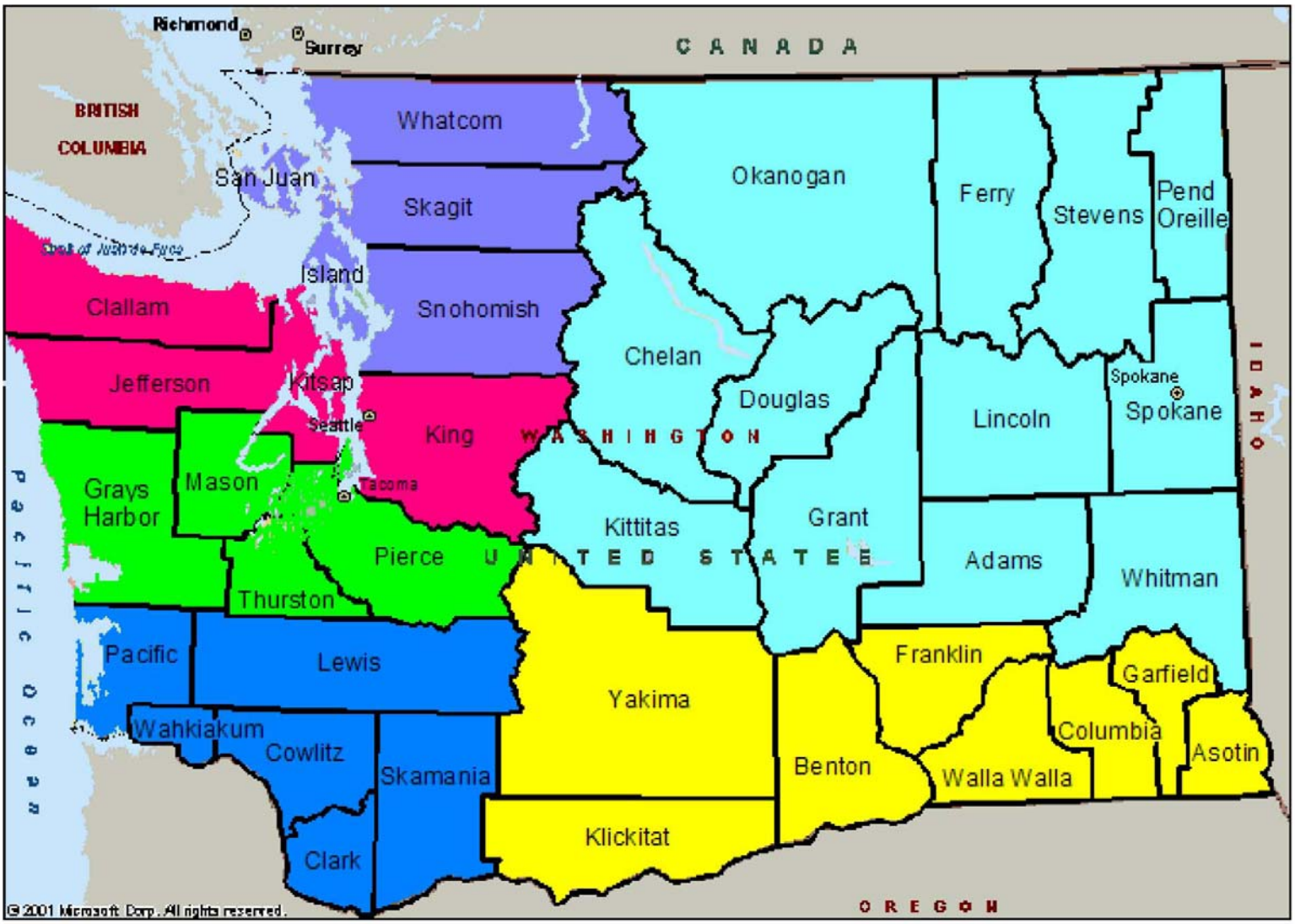

Crime Lab Areas of Responsibility

Kennewick	Marysville	Spokane	Tacoma	Seattle	Vancouver

PROCEDURES FOR EVIDENCE SUBMISSION

The following procedures should be observed to properly prepare and submit physical evidence to the crime laboratory.

SHIPPING

- Check with your local crime laboratory to determine which state crime laboratory should receive the evidence. All of the crime laboratories examine controlled substances; some types of examinations, i.e. firearms, questioned documents, are performed only at a specific laboratory. Toxicology evidence and latent print evidence are examined at their respective laboratories. Refer to the map (p. VIII) to identify your local laboratory.

- Choose a suitable container so that the evidence can be securely packed and preserved during shipping. Each item must be wrapped and sealed separately to avoid contamination.

- Seal the inside container and clearly mark it with the notation "EVIDENCE" and the agency name and case number.

- Pack sealed evidence envelopes, sealed paper bags, etc., into the shipping container. Ensure that sufficient padding material (bubble wrap, Styrofoam peanuts, etc.) is available to prevent excessive movement of the sealed evidence container. Specific guidance for proper packaging of different types of evidence is provided in subsequent sections.

- Place the completed Request for Laboratory Examination (Form WSP-3000-210-005) in an envelope and attach to/or place inside the shipping container. Do not place the Request for Laboratory Examination form inside of sealed evidence. (Laboratory personnel must be able to retrieve the form without breaking any evidence seals.)

- Send the shipping container by U.S. Postal Service or other appropriate carrier to the regional crime laboratory. If using the U.S. Postal Service, send by Registered or Certified Mail with a Return Receipt requested. If using another carrier, request a formal notification of delivery.

PERSONAL DELIVERY

- Personal delivery is the preferred method when the evidence is difficult to pack for shipping, very fragile, or if the evidence is perishable.

- Evidence concerning headlight filaments will be delivered in person to crime laboratories. See section titled "Vehicle Lamp Evidence" in the Microanalysis (Trace evidence) section of this manual for further details on the proper packaging and handling of this type of evidence.

- Personal delivery allows the investigator to discuss the case and its complexities with the forensic scientist. It is advisable to telephone the crime laboratory and arrange for a meeting time with a forensic scientist when the evidence is delivered.

- Remember that sending evidence by messenger increases the length of the chain of custody. Do not send verbal instructions regarding the case with the messenger.

REQUEST FOR LABORATORY EXAMINATION (FORM 3000-210-005)

The Request For Laboratory Examination form is a three-part, color-coded, carbon-less form provided by the crime laboratory. This form must accompany **all** submissions of evidence to the crime laboratory. Instructions for the use of this form are printed on the back of the white and yellow pages of the form. A sample of this form appears on pages B-1 and B-2 of the Appendix.

Some important points to remember when filling out this form are as follows:

- Fill in all of the requested information. Incomplete forms cannot be accepted. If a suspect or victim name is unknown, indicate that in the appropriate block on the form.

- Link your current submission with any previous submission from the same case. There is a convenient box near the top of the form for this purpose.

- Always list the most serious offense according to the Uniform Crime Reporting (UCR) system. Other offenses may also be listed.

- The phone number of the investigator is important. The forensic scientist(s) working on the case may need to discuss the case with the investigator.

- List the items in order of priority (the order in which the requester would like the evidence examined). Use item numbers that are assigned at the time of collection and a very brief description to identify the item.

- In order to improve the efficiency and effectiveness of the quality forensic services that we provide to your agency, it is recommended that the following procedure be used when submitting cases involving six or more exhibits of physical evidence to the crime laboratories:

  — 1) The investigation officer faxes a laboratory request or list of exhibits to the crime laboratory.

  — 2) The officer includes with the faxed request the following message:

  Please call Officer (name) on (date) or (alternate date) between (hours of shift or availability) to discuss and prioritize for submission the exhibits in this case.

  — 3) A scientist calls the officer on the date specified.

  — 4) The officer and scientist discuss the case and come to an agreement as to the exhibits to be submitted and the priority of each exhibit relative to one another.

  — 5) The officer submits the agreed upon exhibits to the local laboratory.

If you have any questions regarding the use of the RFLE (laboratory request) or the submission of evidence, call the crime laboratory serving your area. The addresses and phone numbers of all the crime laboratories are listed on the back of the white and yellow pages of the lab request (appendix B, pages B-1, B-2) and on pages iv to vii in this manual.

GENERAL GUIDELINES FOR THE COLLECTION, PRESERVATION, AND PACKAGING OF PHYSICAL EVIDENCE

There are a number of general instructions that will be helpful to the investigator. Evidence requiring special handling will be discussed in the appropriate sections of this handbook.

A few precautions are continually repeated throughout the handbook. The reason for the repetition is that these precautions are important. Failure to observe them may seriously affect the crime laboratory's examination and, potentially, the outcome of the case. Precautions regarding bloodborne pathogens are mentioned repeatedly due to the hazards that biological materials present.

Some of the guidelines may vary with your department's policies. The guidelines here express the manner in which the crime laboratory would prefer physical evidence to be collected, preserved, packaged, and submitted. They should not substantially conflict with your department's policies.

PRECAUTIONS

Biohazard Contamination

- The handling of items contaminated with biological fluids and stains presents hazards due to the possible presence of bloodborne pathogens. Hepatitis B (HVB) and AIDS (HIV) are of particular concern to those handling liquid blood or bloodstained items. Special care must be taken when handling such materials. **It is strongly advisable to consult your agency's "Bloodborne Pathogens Exposure Control Plan," which is required by WISHA (Washington Industrial Safety and Health Act).**

- **Infectious evidence—Use universal precautions when handling biological specimens or stains** (i.e., act under the assumption that the specimen or stain contains a dangerous pathogen, particularly HIV or Hepatitis B, and proceed accordingly). Use appropriate protective equipment, such as face, eye, hand, and shoe protection. Pointed and sharp-edged objects must be handled with extreme care. Blind searches are definitely to be avoided. Searchers must not place their hands into any space that is not first visually inspected. Eyes must be protected if splashes are likely to occur.

- Eating, smoking, and the drinking of beverages at the crime scene must be prohibited. Shoes should be protected from blood on the floor or grounds. The tracking of blood beyond the perimeter of the crime scene must be avoided. Careful processing of the crime scene will minimize the risk.

- Good personal hygiene must be observed. The hands should be washed thoroughly after the removal of protective gloves, even if the gloves are not cut or punctured. Used protective gear must be disposed of in a manner specified by state and federal regulations.

- Any questions should be directed to the following:

  Industrial Safety and Health Division, Department of Labor and Industries, Olympia: (360) 753-6502.

GENERAL GUIDELINES

- Meet **legal** requirements before entering the crime scene or collecting evidence.

  — Determine if a **search warrant** or **court order** is necessary before proceeding.

  — Maintain a **chain of custody**. Proper documentation is necessary to prove the chain of possession from the time of collection until entered in evidence in court. It may be necessary to prove the integrity of the evidence at some later time.

- Take extra caution when collecting evidence, especially the first responders to a scene. Use gloves and possibly face masks to prevent contamination of possible biological evidence. Take steps to avoid contamination of latent evidence, such as fingerprints, shoeprints, etc.

- Collect a sufficient number and amount of samples. Remember that most of the time it is difficult, if not impossible, to return to the crime scene for more samples.

  — Collect small items of evidence on clean pieces of paper and fold the paper, seal, and label (see illustrations of paper folds at the end of section).

- Labeling evidence: The following information should be noted on the container or attached tag:

  — Item number and agency case number

  — Brief description of item

  — Source of item/name of subject (suspect/victim)

  — Location (where found)

  — Date/time of collection

  — Name or initials of person collecting item

- Preserving evidence: The general rule is to submit the evidence in the same condition as when collected. As with nearly all rules, there are exceptions. These exceptions are noted in the discussion of each evidence type (e.g., some evidence must be dried, refrigerated, or frozen).

  — The evidence must not be allowed to spoil, deteriorate, evaporate, or in any other manner be diminished in content or evidentiary value.

  — Biological stains, leather goods, plaster casts, and vegetable matter must be thoroughly dry before submission. After drying, this type of evidence must be stored in clean **paper** containers. Do **not** use plastic containers.

- Do not contaminate the evidence: The evidence must be handled in a proper manner so that no extraneous material or substance is added.

  — Place evidence directly into a container. Avoid placing the evidence on a surface, particularly one that is soiled or that may contain material similar to that of the evidence.

  — Handle the evidence as little as possible.

  — Package items separately so that transference of possible contaminants does not occur. Care must be taken to avoid leakage and/or breakage so that liquid samples, such as blood, do not leak on other items of evidence.

  — Protect a stain with a clean piece of paper so that when clothing is folded, the stain will not be transferred to another portion of the clothing. An accidental transfer may cause the forensic scientist to misinterpret the stain pattern.

- Sealing evidence:

  — Use nonremoveable tape or evidence tape to seal evidence. Evidence packages are properly sealed if the evidence inside is protected from loss or contamination and an attempt to enter the package would be noticed. **Staples on envelopes or paper bags do not constitute proper seals.** The open flaps of envelopes should be sealed with tape, and each strip of tape must be initialed. The initials must be written across the tape and onto the container surface. Particular care must be taken when sealing containers with controlled substances.

- — Bottles and jars must be capped tightly to avoid leakage and then sealed with tape. The tape must extend across the top of the lid and down both sides of the body of the container.

- — Do not lose any evidence. Package and seal the containers to avoid leakage, tearing, or the sifting of evidence through cracks or small openings. Consider a double package process to protect trace evidence from being lost in a larger outer container.

- Control/Reference samples:

  - — Control (reference/known) samples are necessary when comparisons are to be made.

  - — The substrate samples are required to determine whether the material (substrate) on which a stain is found interferes with the stain analysis.

- Shipping evidence:

  - — Ship evidence by the U.S. Postal Service using either Registered or Certified Mail. United Parcel Service (UPS) is an alternate method of shipping. Obtain proof of delivery service when using these services.

  - — Follow special instructions involving the shipment of biological specimens.

  - — If the evidence is very fragile (such as vehicle lamps) or in some other way difficult to ship, it should be delivered personally.

HOW TO MAKE A PAPERFOLD

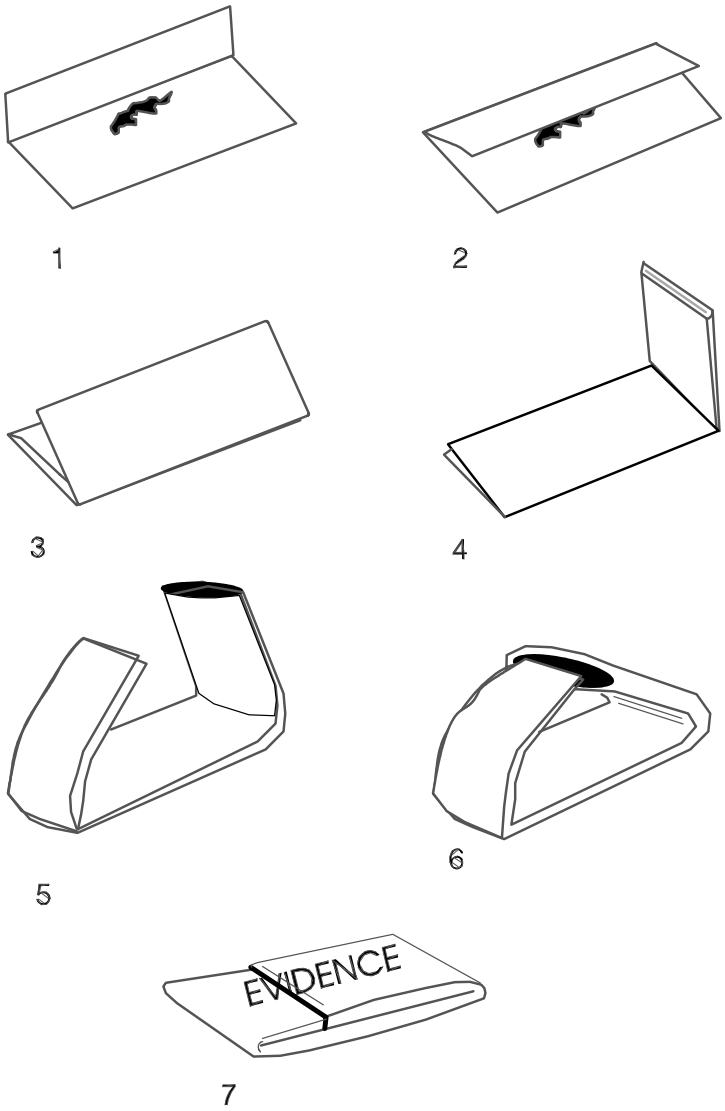

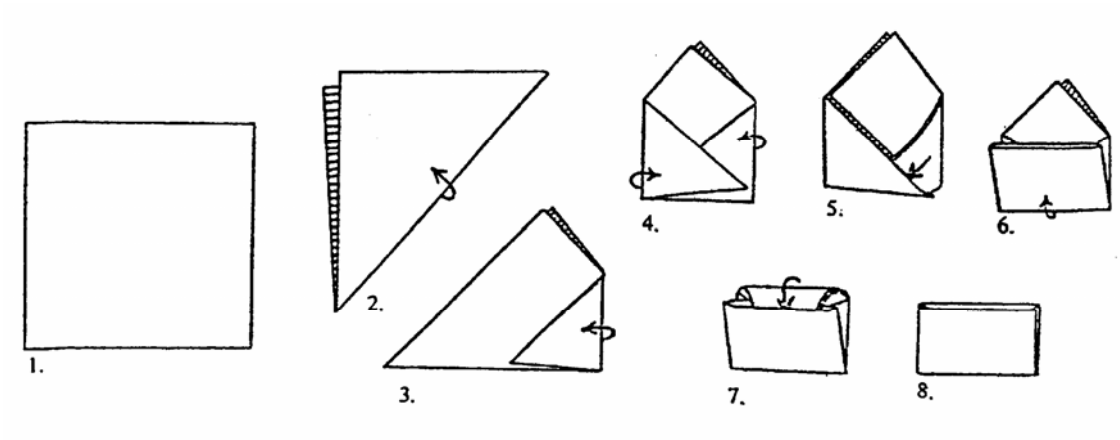

CRIME SCENE RESPONSE TEAM

INTRODUCTION

The complexity and demands of a major crime often overwhelm the resources of a law enforcement agency. The necessity to do a thorough and complete investigation is equally incumbent upon all agencies, regardless of resources and training. The Crime Scene Response Team (CSRT) has been established to respond to calls for crime scene assistance from law enforcement agencies within the state. The CSRT consists of forensic scientists, investigators, and latent print examiners.

GOAL AND OBJECTIVES

The CSRT will respond to requests by law enforcement agencies and assist the agency in a thorough assessment and examination of the physical crime scene. This will be accomplished by:

- Responding in an expeditious manner to minimize the loss of evidence.
- Assisting in the processing of the crime scene by the recognition, collection, and preservation of pertinent physical evidence.
- Recording the crime scene in an appropriate manner, including photography, sketching, diagrams, and note-taking.
- Providing reconstruction of events where warranted.
- Providing the requesting agency with a written report.
- Providing expert testimony.

CALLOUT CRITERIA

The CSRT will respond to the following situations:

- Death investigations (except traffic fatalities)
- Kidnappings
- Assaults/shootings involving a law enforcement officer
- Other crimes as warranted by circumstance and resources

CALLOUT PROCEDURE

Crime Scene Response Guidelines:

The following are the guidance criteria to be considered by the Crime Laboratory Division Crime Scene Response Coordinator in evaluating calls. These criteria are obviously not exhaustive and consideration of appropriate response will depend both on the nature of the case, the needs of the requesting agency, and the availability of scientists. Whenever appropriate, response will be scheduled for normal business hours. Examples of this would be vehicles which have been secured and impounded or are in police custody.

Before responding to any request, the requesting agency must have secured the scene and obtained a valid search warrant or otherwise legal permission to examine the scene.

Criteria to attend immediately:

- In the investigation of a homicide where the body (bodies) of the victim (suspect) is still at the scene and the agency needs any of the following: bloodstain pattern analysis, trajectory analysis, latent print evaluation and collection, scene reconstruction, and evidence recognition and collection.

- Where the suspect(s) are unidentified and remain at large, presenting a danger to the public if not identified as soon as possible with fingerprints, etc.

- In the investigation of a serious crime where it is beyond the expertise of the requesting agency to best preserve and collect evidence that may deteriorate due to the weather. Examples of this would be buried or scattered body remains.

Criteria for Non-attendance:

- At a scene that has been thoroughly searched by the agency and the Crime Lab is being called to confirm that no further useful forensic evidence is present.

- At a scene where the agency has no good investigative information that the vehicle/residence/location is associated with the crime.

- At a scene where there is no compelling forensic reason to respond. An example of this is searching for hairs/fibers in a vehicle to which it was known that the victim/suspect had prior access.

- At a simple scene where verbal directions on evidence collection and preservation can be given to a Detective/Evidence Officer.

During normal business hours (8 - 5, Monday - Friday) agencies can contact the Crime Labs directly for CSRT response. The labs will direct the agency to the Crime Lab Division Crime Scene Coordinator. The Crime Lab Scene Coordinator will then evaluate the call using the guidance criteria to determine the appropriate response.

After hours the CSRT can be contacted at **(253)-548-2020**.

The requesting law enforcement agency can request assistance from the CSRT in one of four methods:

- Contacting the local area laboratory.
- Contacting the CSRT Coordinator at (253) 548-2020.
- Contacting the local WSP Communications Center.

The Coordinator will communicate with the requesting agency to assess the agency's needs and determine the level of response.

RELATIONSHIP TO REQUESTING AGENCY

The requesting agency will retain the responsibility, authority, control, and direction of the overall investigation.

With the exception of selected items for latent print enhancement, the CSRT will not transport evidence from the scene.

The requesting agency will be kept informed at all times of the status of the crime scene investigation.

The CSRT will not engage in any activity that they deem unsafe, unethical, or in violation of accepted crime scene practices, Washington State Patrol regulations, or Washington State laws.

Any requests for information from the news media at the scene will be referred to the requesting agency.

The CSRT will provide completed reports to the agency. All collected physical evidence will be maintained by the requesting agency.

The team members will be available for court testimony.

BIOLOGICAL FLUIDS AND STAINS

Forensic biochemical analyses of body fluids and stains are frequently of value in certain investigations, particularly those involving violent crimes. However, biological evidence is fragile and can easily be destroyed. The recognition and recovery of such evidence must be performed properly by the investigator in order to make the best use of it.

IF YOU HAVE ANY QUESTIONS, PLEASE CALL YOUR LOCAL CRIME LABORATORY. Phone numbers can be found in the Introduction to the Handbook (pages *IV- VII).*

HANDLING OF BIOLOGICAL FLUIDS AND STAINS - UNIVERSAL PRECAUTIONS

The handling of biological fluids and stains presents hazards due to the possible presence of bloodborne pathogens. Hepatitis B (HVB) and AIDS (HIV) are of particular concern to those handling liquid blood or bloodstained items. Special care must be taken when handling such materials. **Please consult your agency Bloodborne Pathogens Exposure Control Plan, which is required by WISHA (Washington Industrial Safety and Health Act).**

Investigators (and other personnel transporting biological material) must use **universal precautions** (i.e., treat **all** blood and bloodstained objects as sources of bloodborne pathogens and take appropriate protective actions) when processing a crime scene. Immunization shots are available for HVB. Protective gear must be worn to protect the hands. Pointed and sharp-edged objects must be handled with extreme care. Eyes must be protected if splashes are likely to occur. Eating, smoking, and the drinking of beverages at the crime scene must be prohibited. Shoes should be protected from blood on the floor or ground. Tracking of blood beyond the perimeter of the crime scene must be avoided. Careful processing of the crime scene will minimize the risk. Blind searches must be avoided. Searchers must not place their hands into any space that is not first visually inspected.

Good personal hygiene must be observed. The hands should be washed thoroughly after the removal of protective gloves, even if the gloves are not cut or punctured. Used protective gear must be disposed of in a manner specified by your agency's Exposure Control Plan and health and state regulations.

Any questions regarding health and safety should be directed to local health authorities or to the Industrial Safety and Health Division, Department of Labor and Industries, Olympia, Washington, at (360) 753-6502; Safety and Health Hot Line, 1-800-423-7233.

SIGNIFICANCE OF BIOLOGICAL STAINS

Biological/DNA analysis on biological stains can be used to:

- Include or exclude an individual as a possible source of a blood, semen, saliva, hair, or urine stain (or species of the source if the stain is not of human origin).
- Be used to compare DNA from a stain to the felon databank when there is no suspect.
- Assist in the reconstruction of events.
- Help identify the weapon used.
- Assist in locating the crime scene.
- Determine the possible commission of a crime.

CRIME SCENE SEARCH

A careful search must be made of the scene. Although bloodstains are often obvious, care must be taken that small stains are not overlooked.

If blood spatters or smears are present, they should be carefully recorded. The size, shape, location, and pattern may be important. The stains should be diagrammed in detail and then photographed from long, medium, and close ranges. A scale (ruler) should be included in the photographs. The interpretation of blood spatters in order to reconstruct the crime scene takes extensive training and experience. The **Crime Scene Response Team** should be contacted **immediately** if you need assistance.

COLLECTION, PRESERVATION, AND SHIPPING

Bacterial action, sunshine, moisture, and warm temperatures can destroy the evidentiary value of body fluid stains.

To collect body fluid stains:

- If a body fluid is dry on a collectible object at a scene, simply collect the object.
- If a body fluid is wet on a collectible object at a scene (clothing, weapon, paper, leaf, etc.), let it air dry, then collect the object. (Exception: see the section below: "To preserve and ship body fluid stains").

- If a body fluid is still wet on an uncollectible object at a scene (floor, wall, boulder, street, etc.), collect it on swabs and air dry either at the scene or in a controlled evidence area.

- If a body fluid is dry and on an uncollectible object at a scene, the stain can either be cut out of the object, or it can be transferred off the object. If cut out, remove enough area around a small stain for use as an unstained substrate sample, or if there is a large stain, cut out a separate, nearby substrate sample. (A substrate sample is an unstained portion of the same surface that the stain is on, nearby the stain. It can assist to determine that the results found on the stained portion are from the stain and not from the surface that the stain is on). The cutting instruments need to be cleaned thoroughly for each stain cut.

- If the dry stain on an uncollectible object is to be transferred, it can either be collected onto a swab(s) or scraped. If the body fluid can be easily flaked off a surface, use a new disposable scalpel or razor blade and scrape it onto a clean piece of paper. If more than one stain is to be collected, use a new blade for each scraping. Present day testing is so sensitive that contamination of the blade from the previous stain may be detected. Fold and tape the paper closed. Otherwise, moisten a sterile cotton swab with deionized water (not dripping wet, just moist enough to dissolve the stain) and rub the stain. If the stain is small, collect it on a small area of the swab. Collect larger stains on as many swabs as necessary. Use a dry swab afterward to collect any remaining residue. If a moistened swab(s) is used, let it air dry. A nearby substrate sample from an unstained area must also be swabbed off the object and air dried.

<u>To preserve and ship body fluid stains:</u>

- Items and swabs collected should be frozen after being dried or if that is not possible, kept in a cool, dark, dry place. Exceptions: Hard objects (guns, knives, rocks, aluminum baseball bats, etc.) should not be frozen, as condensation forms upon removal of these objects from the freezer. Such dense objects should be stored in a cool, dark, dry place.

  For condoms with a small amount of liquid, the liquid should be allowed to dry before packaging. Additionally, a condom with liquid should be packaged so that the liquid can not spill out of the condom, since there may be DNA on the outside of the condom that is important. Place the condom in a sealable plastic cup and freeze.

- Each collected stain or item should be packaged separately from other items and from the substrate samples. Package in paper envelopes, bags, cardboard boxes, or in some other breathable packaging material. Do not use plastic bags or containers. (Exception: the plastic cup used to contain condoms). Because resealing generally uses up some of the volume in a bag, **do not package objects placed into bags tightly**; leave room so the packages can be resealed after examination.

- Label each item thoroughly: case number, item number, date, item description, source and/or location. Then seal and initial across the seal.

- Similarly, evidence collected at a hospital after a sexual assault examination should be dried, if wet, then frozen. If a boxed commercial sexual assault examination kit is used, and a control/reference blood sample has been collected and stored within it, the blood tube(s) must be removed and refrigerated, and the box resealed and frozen - See below for storage and shipping of reference blood samples. Although freezer storage is preferred, DNA typing results can be obtained from properly dried exhibit material stored at constant room temperature for an extended period of time.

<u>To best preserve and ship control/reference blood and saliva samples:</u>

- Blood samples must be drawn into lavender top tubes. (Grey top tubes are used by the Toxicology lab for alcohol and drug screening. In some cases, typically vehicular assaults and vehicular homicides, you may need to collect blood samples in both types of tubes for separate submission to the crime laboratory and the toxicology laboratory.)

- Both the tubes and the packaging need to be labeled with the name of the person from whom the blood was drawn and the date of collection.

- Refrigerate the tube of blood for at least two hours before packaging for shipping.

- Any glass tube packaged for shipping must be cushioned and protected from breaking (this includes tubes used to store sexual assault swabs). Wrap the tube in absorbent material (e.g., tissue paper or towels) and place in a small, resealable plastic bag. Tape top edges together with evidence tape. Place the bag into a second bag and seal, then place this into a Styrofoam mailing container and seal container. Styrofoam containers are commercially available. Mark the package with "Clinical Specimen" clearly visible. Do not mark the package with the word "Blood."

- If autopsy blood is not available or in poor condition, other body tissues can be used for control/reference samples. Please call the crime laboratory for recommendations.

- Sometimes a saliva sample from an individual will be used as a reference. The saliva sample can be collected by using 2-3 swabs. Rub the gums and inside the cheeks so that the sample collected has thoroughly coated the surface of the swabs. Air dry the swabs thoroughly, then package the evidence for submission to the laboratory.

THE COMBINED DNA INDEX SYSTEM (CODIS) PROGRAM

When a case is analyzed in which a DNA profile is developed from an evidence sample, if appropriate, the profile will be searched against the Washington State Patrol Combined DNA Index System (CODIS) and submitted to the FBI-sponsored National DNA Index System (CODIS/NDIS), which is the National DNA database. CODIS generates investigative leads in crimes where biological evidence is recovered from the crime scene using two indexes: the forensic and offender indexes. The forensic index contains DNA profiles from crime scene evidence which can link crime

scenes together. The Washington state offender index contains DNA profiles of individuals convicted of felonies and the misdemeanor offenses stalking, harassment, and communicating with a minor for immoral purposes.

CODIS also maintains the following additional indexes:

- Missing Persons: contains DNA records of missing persons and deduced missing persons.
- Relatives of Missing Persons: contains DNA records from the biological relatives of individuals reported missing.
- Unidentified Humans: contains DNA records from recovered living persons (e.g. children who can't and others who can't or refuse to identify themselves) and recovered dead persons (including body parts and tissues) whose identities are not known.

Buccal samples used as controls obtained from convicted felons are collected by correctional facility staff using a specific kit provided to them by the Crime Laboratory Division. These kits are <u>not to be used</u> for the collection of reference samples from individuals involved in criminal cases.

DNA REFERENCES IN A MISSING PERSON CASE

Sometimes the most difficult part of a missing persons case is obtaining a reference DNA sample for the victim. Reference DNA is used to make DNA comparisons to the physical evidence of a crime or to identify remains. Due to recent advances in DNA technology, items that were previously unlikely to give a DNA profile (i.e., hair, toothbrush) may now be used as a reference sample. These comparisons may be made in addition to, or instead of, DNA testing of close relatives (parents, children) of a missing person to determine the missing person's possible genetic makeup.

Generally, it is best to gather items that may contain a missing person's DNA as soon as possible after the disappearance. However, it is possible that DNA on items found years after a person's disappearance may give useful results.

Here is a list of some items that might contain usable reference DNA from a missing person.

Combs and hairbrushes	Toothbrushes and floss	Cigarette butts	Tissue used to wipe nose	Soiled clothing
Envelopes of sent letters and cards (saliva)	Swabbings of door knobs	Jewelry and accessories (rings, watches)	Purse	Pocket contents (keys, wallet)
Swabbings of steering wheel	Soiled linen	Phone handsets	Swabbings of refrigerator handle	Remote controls (TV, garage)
Hats and caps	Dentures	Contact lenses	Feminine hygiene products	Medical supplies
Cosmetic puffs (cotton balls)	Nose bleed samples	Unwashed forks and spoons	Baby teeth	Shavers and razors

COLLECTION OF PHYSICAL EVIDENCE IN SEXUAL ASSAULT CASES

Evidence in sexual assault cases may be recovered from several sites: from the scene of the assault, from the suspect, the suspect's vehicle and clothing, and from the victim's body and clothing. Historically, sexual assault evidence was primarily collected from the victim. However, the sensitive techniques now available to the forensic community allow us to pursue DNA typing on exhibits such as penile swabbings from a suspect, the suspect underwear (for victim's DNA), and fingernail/tip samples in digital assaults. Consideration of collection of these types of samples should be made is the suspect is apprehended relatively soon post-assault, or if he has not washed/changed clothes. Please call your local laboratory for case specific recommendations.

It is imperative that the victim receive immediate medical attention. Promptness of an examination will also permit medical personnel to retrieve any physical evidence before being lost through washing or cleaning. Commercial kits are available to assist the attending medical personnel in collecting specimens and controls required by the crime laboratory.

The Harborview Center for Sexual Assault and Traumatic Stress has established guidelines for sexual assault medical evaluations for adults and adolescents. Please see Appendix A for the complete protocol.

The following is a brief outline of the procedures followed by medical personnel when dealing with a sexual assault victim. It is not a complete, detailed medical protocol, but a summary of the process for the investigator. For a more complete procedure, refer to Appendix A of this manual.

COLLECTION OF PHYSICAL EVIDENCE BY MEDICAL PERSONNEL

General Precautions

- **Proper labeling:** Each item must be identified as to contents, agency case number, item number, source, subject's name, time and date of collection, and initials of the collecting person.

- **Proper packaging:** Each item, including each article of clothing, must be packaged separately. Transference of materials between items must be avoided. Use clean paper bags and envelopes to package evidence to avoid the accumulation of moisture inside the package. The presence of moisture enhances bacterial growth. All packaging should have tape over any gum seals and all openings to ensure that small particles are not lost. Manufacturer's seals do not necessarily need to be sealed, unless there is an indication that evidence may be lost or contaminated if left alone.

- **Proper drying:** Stains and swabs must be thoroughly dried at room temperature without the use of heat. Partially dried items will be subject to bacterial action and mold, destroying their value as evidence. Cool air fans at very low speeds may be used to dry swabs.

- **Proper collection of reference/control samples:** The control samples that are to be compared to samples of unknown or questioned source must be collected from a known source (e.g., victim's blood, hair control samples).

Collection of Evidence:

The examination should be conducted in a manner which avoids the loss of evidence. The preferred sequence of the examination is to first examine and collect the clothing, then the external areas of the body, and finally the internal areas of the body.

- **Clothing:**

  It is critical to collect articles of clothing worn immediately after a sexual assault in which the suspect has deposited body fluid evidence on the victim. These may not be the clothing the victim wears to go to the hospital.

  — Have the patient undress while standing on a double layer of clean paper. After undressing, the top layer of paper should be folded, sealed, and properly labeled. Discard the under layer of paper which is in contact with the floor surface.

  — Clothing must be thoroughly air-dried. Do **not** use a fan or blow dryer which may blow off small particles, hairs, and fibers.

  — Place each article of clothing, including shoes, in a **separate** clean paper bag. Seal and label each bag, stating the article of clothing, subject's name, date, time, and initials of the person collecting the article.

- **Foreign objects and debris:**

  — Examine the exterior surfaces of the body for the presence of objects such as hair, grass, and soil. Collect the solid material on a clean piece of paper, fold, properly label, and seal. Place the sealed paper in an envelope; seal and properly label the envelope, noting the area of the body from which the material was collected as well as the other necessary information.

  — If possible, collect oils, lubricants, lotions, and stains in a glass test tube or vial; otherwise, concentrate on a small gauze pad. Liquids can be collected in vials. The gauze pads can be dried and packaged in paper. Cut away the excess portion of the gauze pad and place the specimen in a paper package (do not use a plastic container). Seal and label the package and wrap carefully to avoid breakage.

- **Pubic Hair Combing collection:**

  — Place a clean piece of paper under the patient and have the patient comb the pubic hair area with a 100% cotton-stuffed comb until no more hairs comb out. The 100% cotton-stuffed comb is prepared by taking a new comb and running it several times through clean, rolled absorbent cotton. Place the comb on the paper and fold, seal, and label. Place the paper in an envelope, seal, and label as "pubic hair combings" with other necessary identifying information.

- **Other Combings:**

  Similar procedures should be followed for collection of head hair combings and facial hair combings. Collect, seal, and label properly. **Do not package hair combings with any control samples.**

- **Deposits on skin, bite marks, and Wood's lamp (alternate light source) deposits:**

  — Wipe the area of the deposit or bite mark with a sterile damp swab and follow it up with a sterile dry swab. Save both swabs for analysis. A substrate control from the skin must be collected from a saliva/deposit-free area, adjacent to the deposit. The substrate sample must be collected in the same manner as the questioned sample.

  — Collect large deposits of oils, lubricants, creams or ointments in a glass test tube or vial. Otherwise, wipe the area of the deposit with a sterile damp swab(s) and follow it with a sterile dry swab(s). A substrate control must be collected from a deposit-free area, adjacent to the deposit, in the same manner as the questioned sample. Submit an unused swab as a swab control sample. Collect, if possible, the original container of the oil, lubricant, lotion, cream or ointment as the reference control sample. Air dry swabs completely at room temperature and package in paper. Package the deposits and controls separately. Mark the packages as “deposit area”, substrate control”, “swab control”, and “reference control”, as appropriate. Wrap carefully to avoid breakage.

- **Specimens:**

  — The crime laboratory requires four vaginal, four anal, and four oral swabs to be collected as appropriate.

  — External deposits should be documented, photographed (if possible), and collected.

  — Swabs must be completely air-dried before packaging. (Also any clothing collected.)

  — All evidence containers (i.e., swabs, tubes, envelopes) must be properly labeled and identified.

— If glass tubes are used, the sexual assault evidence kit should be packaged in such a way to avoid breakage during transport. However, glass tubes should not be used unless necessary.

- **Reference/Control Samples:**

  — Control samples should be collected from both the victim and suspect before examinations and comparisons are made. It is preferred that victim/suspect control samples be collected by finger puncture and dried on FTA sample collection cards as provided in commercially available sexual assault examination kits. The current sexual assault examination protocol does not call for collection of a liquid blood sample for blood typing purposes at the time of hospital examination. Should it be necessary to obtain a blood sample for typing purposes, the blood should be collected in a lavender-top Vacutainer tube. (Do not confuse this with the gray top blood tubes used for alcohol and drug analysis, which are sent to the Toxicology Laboratory.) Refrigerate the liquid blood sample. Do not freeze.

  — Please refer to Appendix A for the complete procedures for collection of sexual assault evidence.

TRACE EVIDENCE

INTRODUCTION

Small, often microscopic, quantities of material have always been of interest to crime scene investigators. These particles can be the key to a successful investigation. An individual or object leaves behind and/or picks up traces of materials from another person or an environment, however brief and slight the contact. This concept is referred to as Locard's Principle of Exchange.

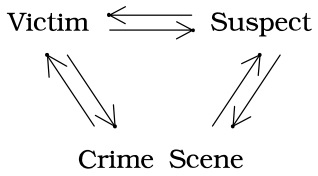

The diagram illustrates the principle of the exchange of trace evidence between suspect, victim, and the crime scene.

Evidence that results from this exchange can suggest a link between the suspect with the victim and the crime scene. The connection is established by the comparison of trace evidence from a questioned source with samples from a known source (reference/control); for example, glass found on a burglary suspect's clothing (questioned evidence) can be compared with glass from a broken window (control sample) at the burglary scene. **The timely collection of known samples from the victim, suspect, and the crime scene is critical**.

PRECAUTIONS

- The investigator must use caution to avoid unnecessary, damaging exchange/contamination with the crime scene. Some exchange is unavoidable; however, it must be controlled and held to a minimum.

- After the incident, the suspect and the victim must **not** come in contact; their clothing must be packaged and kept separate. The suspect and/or the victim must not be brought back to the crime scene while it is still being processed. Samples taken from the scene should be packaged **separately** from the suspect's and victim's clothing to avoid contamination.

- Special care must be taken not to contaminate or lose any small particles of evidence.

- Avoid damaging any critical areas of the evidence which may have holes, rips, tears, smears, impressions, stains, cuts, or bloodstain patterns. When removing clothing, avoid cutting through these critical areas. If cutting is unavoidable, such as when removing clothing in an emergency room, be sure to take careful notes/photos of the location and appearance of the critical area, and identify the cuts made by medical personnel. Photographs taken before alteration or changes in appearance to the evidence item should be submitted with the items. Remember to use a scale/ruler in the photographs.

- Control/reference samples must be collected as soon as possible to avoid loss and change. If control samples from both the victim and suspect are not **both** available, contact the crime laboratory to determine what evidence should be submitted. Both control and questioned samples usually must be submitted before any comparisons can be made.

- Damp or wet items, particularly clothing, must be **air-dried** at room temperature over clean paper. After drying, handle the clothing carefully so that trace evidence is not lost. Wrap the clothing items in clean paper and fold the air-dry collection paper to retain any loose debris. Place the collection paper and wrapped clothing into paper bags for submission to the crime lab. Wrapping the item in paper and folding the air dry collection paper keeps the trace evidence from being lost in the seams of the paper bag. Do **not** use plastic containers. Avoid contamination.

- It is critical that each item or container be properly sealed and labeled. The label must describe the contents, the item number, the donor or source if known (do not identify the item as from the "victim" or "suspect"-please provide a name), location where found, date, time, and name of person collecting the evidence. The investigator should make notes as to the condition of the evidence and any other observations of value.

- Do **not** submit razor or scalpel blades.

- Do **not** submit hypodermic needles or syringes with the needles attached. The crime laboratory will not accept cases which contain needles, regardless of the packaging.

  NOTE: *State regulations completely prohibit the removal of contaminated needles by shearing or breaking [WAC 296-62-08001(4)(b)(vii)].*

- Proper packaging is particularly important when handling fragile evidence such as paint flakes, glass fragments, head lamps, dental stone casts etc., as described in the following sections.

HAIR

Hair evidence may be found in all types of crimes, especially in crimes where bodily contact has been made. Hair evidence is more likely to be found if physical contact is involved, such as in crimes involving homicide, rape, and/or assault.

Significance

Microscopic examination and screening of hair can reveal:

- If the hairs are of human or non-human origin.
- The possible race of the donor and the body area origin of the hair.
- If the hairs were forcibly removed from the body or were naturally shed.
- If the hairs have been cut.
- If the hairs have been chemically treated.
- If the hair has been subjected to trauma, such as high temperatures, flame, or a crushing blow.
- If the hair was damaged by disease.

Microscopic examination of hair evidence helps to characterize the hair evidence. With the advent of DNA analysis, it is possible to obtain information about the individuality of single hairs from tissue adhering to the roots of the hair, provided there is sufficient tissue adhering to the hair to examine and a control blood or buccal specimen (or DNA profile) from the possible source is available. Evaluation of the suitability of hairs for DNA analysis will be on a case by case basis.

The species of animal sometimes can be determined from a microscopic examination of hairs. An individual animal cannot be identified by hair comparison.

Collection

- Make detailed notes showing date, time, and location of the collected questioned hairs. Photograph if necessary.
- Combine hairs that are found in the same specific location.
- Do not combine hairs that are collected from different locations. Place the hairs from each location in separate paper containers or plastic bags. Place these small containers into larger manila envelopes, properly seal and label, and submit to the crime laboratory.

- If hair is firmly attached or embedded in an object, do not remove the hair. Send the object with the adhering hair to the crime laboratory, if feasible. Otherwise, photograph the hair in place and then remove the hair carefully, keeping it intact. Contact the crime laboratory if there is any question on how to proceed.

- Pubic hair combings in sexual assault cases are **not** known reference/control samples. They are questioned samples and are collected by medical personnel. It is important that the medical personnel have a sexual assault kit that contains materials for the collection of pubic hair combings and head and pubic hair controls as well as other necessary samples.

- Check the hands of assault and homicide victims. Hairs may be found clutched in the hands or under the fingernails. Hairs may also be found on the bodies and/or on clothing.

Packaging

- Place the hairs in clean paper or small plastic bags (see page 2-4, for paperfolds). Seal with tape and write the date, time, item number, description of the evidence, and the location where it was found. Then place the sealed paper package into an envelope. Seal the envelope and identify the contents; note the date, time, and initials of the person handling the evidence.

- If the hairs are placed directly into an envelope, make sure that all the flaps and corners of the envelope are sealed with tape. Even a slight gap can cause hairs to be lost.

Hair References/Controls: Refer to appendix A, the SEXUAL ASSAULT NURSES EXAMINATION (SANE) protocol for collection guidelines.

GLASS

Homicides, burglaries, hit-and-run cases, and assault cases often provide useful glass evidence. Glass taken from a broken window at a burglary scene (control sample) may be compared with glass fragments found on a suspect's body or clothing; glass from a broken windshield may be compared with pieces of glass found on a hit-and-run victim's body or to glass found at the scene. These types of cases involve comparison of the glass samples to determine if they could have a common origin. With larger pieces of glass, it may be possible to physically fit the questioned glass to larger pieces of the control sample of glass. These examinations require the complete collection of the control glass pieces.

The way the glass is broken and the position of the glass fragments may reveal the direction of a projectile and potentially the order in which several projectiles penetrated a glass pane or window.

Significance

The examination of glass may reveal:

- If two pieces of glass could be of common origin.
- Physical fit/match.
- The direction of force that broke the glass.
- The direction of travel of a projectile that perforated the glass.
- The type of glass (i.e., auto safety glass, headlight lens, etc.).

Glass fragments from the scene which can be physically fitted with fragments from the suspect vehicle or the criminal's clothing are of great value. These physical matches can prove conclusively that the fragments were once one integral part.

Similarities in properties such as refractive index, elemental composition, color, and thickness increase the probability that several questioned fragments may have a common origin.

Collection

- If the direction of force which broke the glass is to be determined, all of the glass must be retrieved. Glass remaining in the window frame must be marked so the surfaces can be identified as "inside" or "outside," and may need to be taped to prevent loss or further breakage. The amount of glass on the ground or floor on each side of the frame should be noted and collected separately. Photographs of the window frame should be taken prior to collection of the complete frame. Carefully package and submit all of the glass recovered. Submission may require hand delivery to the crime lab.

- If projectile holes, such as bullet holes, are to be examined, the entire pane of glass should be submitted intact. Care must be taken not to disturb any possible gunshot residue on the surface of the glass. The glass may have to be taped on the exit surface to hold it together. If the exit side cannot be determined, consult with the crime laboratory.

- At traffic scenes, it is important to search a wide area. Glass fragments can fly appreciable distances in many directions; pieces of glass may drop off a fleeing auto some distance from the scene. All glass fragments must be recovered, with each different location identified and packaged separately, especially glass from headlights, tail lights, and signal indicators.

- If glass fragments are suspected to be on clothing, do not attempt to remove the glass at the scene. Handle the clothing carefully so that the fragments are not lost or transferred to other items. Wrap each article of clothing in clean paper and package them in separate paper bags.

- Glass fragments are often embedded in the soles and heels of shoes as one walks over broken glass. Do not remove the glass from the shoes. Wrap the shoes in clean paper and place them into separate, clean paper bags. Control samples collected at the scene should be submitted separately. Avoid contamination.

- All of the glass must be collected if a physical match is to be considered.

- Care should be taken to preserve any other trace evidence such as hairs, fibers, paint, shoe prints, or stains that may be adhering to the glass.

Packaging

- Glass found in different areas must be packaged separately.

- Small pieces of glass should be placed in a paperfold, sealed, labeled, and packaged in a small rigid container (e.g., a pill box, metal vial). The container must also be sealed and properly labeled.

- Large pieces of glass should be packaged in rigid containers. Use packing material such as cardboard or part of a corrugated carton to avoid breakage and to protect the edges. Hand delivery is the preferred way to submit large pieces of glass, as it avoids the task of extensive packaging and reduces the risk of breakage.

- Package so that if a container opens or tears during shipping, the glass is not lost and does not leak out and contaminate other glass evidence or pose a safety hazard.

- Vehicle lamp filaments can break when they are sent by mail; therefore, they should be hand-carried to the laboratory for examination. See the section on vehicle lamp examination for more information.

CONTROL/REFERENCE SAMPLES

- It is important to collect and send all of the known broken glass (controls) to the crime laboratory for comparison with questioned fragments from the suspect, suspect vehicle, victim, etc. If the control glass source is large, a number of representative samples may suffice. Consult the crime laboratory as to the extent and size of the samples needed.

- Submit control samples from each source of broken glass. Samples from both panes of a double pane window must be submitted.

- Glass such as that found in the frame of a window or remaining in a headlight rim are the best control samples, preferred over glass samples from a floor or roadway.

- If it is important to know whether the glass was broken from the inside or the outside, the submitted control fragments must be carefully marked as to the collection location or facing position in the window frame. The crime laboratory must be consulted for details.

CLOTHING AND FIBERS

The transfer of fibers and fragments of cloth can be the result of such actions as violence to a person with a weapon or with a vehicle, clothing being snagged and/or torn, or the contact of clothing with another article of clothing. Microscopic examinations of fibers, yarns, and clothing can reveal many characteristics which can be further supported by chemical and physical analyses. The type of fiber, color, dye characteristics, thread count, twist, and cross-section can be determined. The piece of cloth may be physically fitted into a garment, showing a common origin.

Significance

The examination of fibers and fabric may reveal:

- Contact between two or more persons.

- Contact with objects such as blankets, upholstery, carpets, and drapes.

- Contact between a vehicle and victim.

- Contact between the suspect and the crime scene.

- A physical match between two pieces of fabric.

Fibers may assist in locating the positions of persons riding in a vehicle, if the fibers are embedded or are firmly adhering to a surface.

Comparison of questioned and control fibers and threads cannot conclusively establish that they are of common origin. However, the forensic scientist can determine the color, type, and generally the product use of the fibers. The types of fibers are animal, vegetable, mineral, synthetic, or a mixture. Various product uses are garments, carpets, bed clothing, etc.

Collection

- Pieces of fabric, threads, or fibers may be found adhering to the front or underside of a vehicle which hit a pedestrian. They may be part of a fabric impression. Photograph the impacted fibers and the entire fabric impression prior to collection.

- Fibers are readily caught in hair. An assault victim's head should be combed with a cotton filled comb to recover any fibers. Sexual assault victims should have the pubic area combed in the same manner. A suspect's head should be combed in the case of an assault if a head covering was used as a disguise. The head covering should also be collected.

- Recover the clothing to be examined, taking care to avoid contamination and loss of fiber and other trace evidence. Dry carefully, if damp or wet, on a clean piece of paper in a protected area. Collect the debris that falls onto the clean paper. Package each clothing item separately to avoid transfer of fibers from one item to another. Submit the paper over which the item dried together with the item itself.

- Any observed threads and long fibers should be carefully collected using tweezers. Place the recovered material on a clean piece of paper and fold, seal, and label.

- Small fibers should be left on the item and the entire item, or at least the part holding the fibers, submitted to the crime laboratory.

- Transparent tape can be used to pick up fibers from surfaces. The adhesive surface of "Post-it" notes is also useful for collecting fibers. Since fibers can be difficult to see, surfaces likely to have come into contact with fibers of interest should be tape lifted routinely. The adhesive surface of the tape or Post-it should be placed on a clean glass slide or clear plastic sheet, i.e. sheet protectors. Vacuum cleaning is not a desirable collection procedure, since it picks up so much dirt and other extraneous material. It should be used as a last resort to collect trace evidence. At times, fibers can be swept onto a clean piece of paper. A surface may have to be carefully scraped to remove fibers if the fibers are impressed into a surface, and the surface cannot be removed for submission.

Packaging

- It is best to collect the loose fibers or threads on a clean piece of paper and then fold, seal, and label. Place the folded paper into an envelope or paper bag, seal, and label. Do not put loose fibers in the outer evidence envelope.

- Since fibers, threads, and fabrics can be easily lost, care must be taken to seal each container. The corners and flaps of an envelope must be sealed with tape.

- Air dry clothing items at room temperature in a protected area and place a clean piece of paper over the item to protect against contamination while drying. Do not use fans to dry the items. Wrap them in clean paper, and package each in a separate paper bag along with the paper over which the item dried.

CONTROL/REFERENCE SAMPLES

- All clothing that may be involved in the case must be collected for comparison with the collected questioned fibers.

- Representative samples of possible sources of the collected questioned fibers-such as rugs, blankets, and upholstery-or the entire item itself must be submitted as the control samples. Take control samples that represent the entire source, such as color, fabric, worn areas, etc. The crime laboratory should be contacted for assistance and information on the collection of the control samples.

- If carpet fibers are involved or suspected, a representative sample of carpet must be submitted. The sample should be a piece of the carpet or good representative samples pulled from the carpet, including areas of worn and non-worn carpet. Carpets can consist of several types of fibers, so it is imperative to collect samples from various areas of the carpet.

PAINT AND OTHER PROTECTIVE COATINGS

Chips and fragments of protective coatings-such as paint, varnish, lacquer, enamels, and plastics-can often be found at the scenes of hit-and-run cases and burglaries involving forced entries. A transfer of paint can occur when two vehicles collide. Chips of paint at the accident scene or on the victim's clothing may produce information regarding the vehicle which fled the scene. Traces of paint on burglary tools may connect these tools to the burglary scene.

Significance

The examination and comparison of paint or other protective coating chips and fragments may reveal:

- That the paint chip from the scene came from a particular object or vehicle by a physical match (i.e., the questioned paint chip edges fit like a piece of a jigsaw puzzle with edges of the damaged area).

- A possibility of common origin if the questioned chips and control samples show similarities in physical and chemical characteristics. Multilayered chips which also show similarities and correspondence in the number of layers, order of colors, and thickness of the layers can increase the probability of a common origin to a very high degree, sometimes approaching the level of reasonable, scientific certainty.

- The type of paint or coating and its applications. This information may lead to a possible source. Chips left by an automobile at a hit-and-run scene may produce information regarding the make, model, and year of manufacture.

Collection

- Paperfolds and plastic or paper envelopes can be used to collect the paint samples. Paper is preferred over plastic because of the static electricity buildup problems of plastic.

- Small samples of material should be collected on a clean piece of paper. The paper fold is then labeled, sealed, and placed in an envelope, which in turn is labeled and sealed.

- A convenient method of collecting paint scrapings is to tape an envelope or clean sheet of paper just below the sampling area. Hold the envelope or paper open and scrape the paint samples loose, allowing them to fall into the paper. Be sure the paint samples contain all the layers of paint down to the underlying surface. Use a new, clean blade for sampling each particular area. Tape the corners and seams of the envelope or use folded paper.

- If the item containing the paint or paint smear is small enough, the entire item should be submitted to the laboratory. Do not attempt to remove the paint.

- If an item is too large to submit to the laboratory, control paint chips or the questioned paint chips representing all of the layers must be submitted. Do not scrape off the sample in such a manner that the paint chip sample contains only a partial number of layers. The forensic scientist will examine a cross-section of the chip to determine the number, depth, and the color of each layer.

Packaging

- Each of the recovered items must be packaged separately, properly labeled, and sealed. If a vehicle is involved, labeling should include the location on the vehicle, make, model, year, VIN, and license plate number. Envelopes must be sealed on the corners with tape to ensure that no leakage occurs. Put the paint chips into a folded paper packet and label, then place the packet into a second envelope, also labeled properly.

- Tools with paint smears must be protected to avoid loss or contamination of the questioned paint. The area containing the paint smear should be protected with soft tissue paper, and the tool packaged securely into an appropriate container (e.g., box).

- If paint chips are to be submitted for a possible physical match, they must be packaged so that the chips do not break. The chips must be protected with tissue paper or cotton and placed in a small, rigid container.

CONTROL/REFERENCE SAMPLES

- In all cases, the control samples must be taken from an undamaged area immediately adjacent to the area of damage or of interest. The collected chips must contain all of the layers down to the underlying surface. If a physical match is possible, all paint from the damaged area must be collected or the item submitted.

- When investigating a hit-and-run collision, control samples should be taken from each vehicle. The samples should be taken from the undamaged area on the same panel immediately adjacent to the damage. Similar control samples must be taken from the suspect vehicle when it is apprehended. Different body panels or parts may have different paint or layer structure. Samples from each damaged panel must be taken (i.e., fender and door).

- At burglary scenes, control samples should be taken from an area immediately adjacent to the toolmark. Do not touch the toolmark itself; it may be altered and rendered useless for later toolmark comparison examinations. The paint on a door or window jamb may not be the same as on the door or window itself. If it appears that paint may have transferred from both surfaces, control samples must be taken from each surface.

VEHICLE LAMP EVIDENCE

Introduction

Vehicle lamps are submitted to the crime laboratory when the question of whether a vehicle's lamps were on (incandescent) or off at the time of an impact is critical to the prosecution of a case.

Precautions

- Never turn on a vehicle's headlamps after an accident. If the glass envelope of a bulb has fractured, the filament can burn out when energized and show indications of being incandescent at impact.

- The evidentiary value of vehicle lamps can be lost if the lamps are not collected, packaged, and transported using the correct procedures. Lamp filaments are often fragile after an impact. Lamps should always be hand carried to the crime laboratory rather than mailed or shipped.

Significance

Vehicle lamp conclusions range from "on" (incandescent) at the time of impact to "off" at the time of the impact in question. The condition of vehicle lamps after an impact can often be explained by more than one set of circumstances. For this reason, vehicle lamp cases are often inconclusive.

Collection and Preservation

- Prior to removing a lamp, mark the 12 o'clock or "up" position.

- If possible, measure continuity of the filaments using a circuit tester prior to collecting the lamps. Do not test continuity by turning on the lamps.

- Avoid breaking any filaments during handling or transporting lamps. If a filament is accidentally broken, make note of the fact and submit the information with the lamp.

- Whenever possible, submit all of the lamps from the vehicle in question.

- If a lamp is intact and easily removed from its socket, it can be removed as normal for replacing the lamp.

- Broken lamps should be removed with the lamp base and packaged to protect the filaments. One method of accomplishing this is to push the lamp base through a hole in the bottom of a drink cup, cut the bottom from a second cup to put over the lamp as a spacer, and use a third cup as a cover. Tape the cups together.

- Check the lamp housings and surrounding areas for loose filament fragments. Use tweezers or "Post-it" notes to collect any fragments of loose filaments present. These can then be packaged in plastic bags or envelopes.

- Do not place packaging materials around the filaments of broken lamps.

- Provide a diagram of the accident, speeds and directions involved, vehicle information, and photographs of the damage. Include any additional relevant information, such as number of impacts, any prior impacts the lamps may have been subjected to, time of day, and weather conditions.

Packaging and Transporting

- When the lamp is removed from the vehicle, label with the exact location, usage, and vehicle information (year, make, model, license number).

- Ensure that the lamps are protected from shock and that all packaging materials are well sealed.

- Hand carry all vehicle lamps. Failure to hand carry vehicle lamps can result in a loss of information. There are circumstances when the damage to a lamp can be used to determine if it was incandescent at the time of an impact only if it can be demonstrated that the damage did not occur subsequent to the impact.

IMPRESSION EVIDENCE

Wherever a crime has been committed, someone has had to enter and exit the scene. In the process shoeprints, footprints, and tire tracks can be left. This evidence should be aggressively searched for at crime scenes and precautions taken to preserve it, for later documentation and collection.

Impression evidence also includes fabric impressions and latent prints. Latent fingerprints and palm prints are examined by the Latent Print Laboratory. Please refer to the Latent Prints Section of this manual for more information.

Forensic odontology is not performed in the Washington State Patrol Crime Laboratory System. The Crime Laboratory can provide referrals if bite marks require examination.

Toolmark impressions are examined in the Firearms section and are discussed in the Toolmark section of the Physical Evidence Handbook.

Significance

Examination of impression evidence may reveal:

- Possible number of footwear and/or objects present
- If an impression was created by a specific object.
- The approximate size of the object creating the impression.
- Manufacturing information about the object creating the impression.
- Possible sources of what caused the impression.
- Order of deposition and possible movements/direction of travel at the time the impressions were made.

Impression evidence can show class characteristics, wear characteristics, and individualizing characteristics. Class characteristics include such things as the overall pattern of a shoe outsole, the weave of a fabric, or the number of ribs and grooves in a tire track. Wear characteristics are those due to the erosion of the surface of the item being examined and are reflected in the impression. Individualizing characteristics are a product of random events which occur to that one item, such as cuts in a shoe outsole, a flaw in the weave of a fabric, or a stone in a tire's tread. When present in sufficient quantity and detail, the individualizing characteristics in an impression allow it to be identified to a specific source.

Shoe prints can be examined to obtain information as to possible manufacturer, type of footwear (boot, athletic, dress), and approximate size. Tire tracks can be examined to obtain information as to possible tire manufacturer, design name and type of tire (automobile, truck, off-road vehicle). Fabric impressions can be examined to determine the type of weave and possible sources.

Collection

- The impression needs to be photographed 1) both with and without a scale/ruler, 2) using a low speed film, and 3) using lighting which highlights the impression (usually several oblique or side lighting shots). The camera must be placed directly over or straight onto an impression, not at an angle to the side, so that the entire impression is clearly in focus and no size or focus distortions result. Use of a tripod to hold the camera steady is recommended. The scale must be in the same plane as the impression so that both are in focus simultaneously. The camera should be positioned as close as possible to the impression (fill the frame with the impression).

- Whenever possible, the entire object which has the impression should be submitted to the laboratory. Positive identification of the source of the evidence is more likely when the original impression can be examined. The evidence has to be packaged in a manner which protects the impression from contact with any other surface.

- When the impression cannot be submitted to the laboratory, the impression should be documented using photography. It should then either be cast or lifted. Dust impressions are best lifted using an electrostatic dust print lifter. An impression can sometimes be lifted with fingerprint tape, a trace evidence lifter, or a gel lifter. Where appropriate, an impression can be lightly dusted with fingerprint powder prior to being lifted with fingerprint tape or a gel lifter. Impressions in soil should be cast with dental stone (plaster should be avoided as it gives less detail and forms a softer cast). Impressions in snow and under water require special handling, and the crime laboratory should be contacted for instructions when these types of impressions are encountered.

- Be aware of clothing impressions on car finishes, bumpers, undercarriages, etc. The opportunity may exist to compare the impressions to the clothing items.

- Care should be taken to preserve any trace evidence such as hairs, fibers, or paint in the impression.

- Some impressions may be latent in part or whole and need to be chemically enhanced before correct documentation and collection is possible. Contact the crime laboratory for instructions in these instances.

It is important to photograph the impression prior to collection and/or making any alterations to it. For this reason, all impressions should be photographed at the scene with and without a scale. Although impression evidence examinations can be done using only photographs (correctly

taken), lifts or casts should also be taken. The important individualizing characteristics required to identify the source of an impression are often not visualized in a photograph. Also, for impressions in soil and snow, there is three-dimensional information that is lost in photographs.

Packaging

- Impressions and dust print lifts of impressions should be secured in boxes in a manner which prevents anything from coming into contact with the impression or lift. Plastic should **never** be used to package impressions or dust print lifts of impressions since the plastic can actually develop an electrostatic charge which can then remove portions of the impression or lift.

- Casts should be thoroughly air dried prior to packaging. The cast should be cushioned and packaged in a cardboard box which allows the cast to continue drying. **Never** use plastic.

- All items should be clearly marked as to location, orientation to the scene, date, and agency information.

CONTROL/REFERENCE SAMPLES

- Most of the impression examinations performed by the Microanalysis/Trace Evidence Section of the Crime Laboratory Division involve comparison of the questioned evidence impression with a known source (shoe, tire, etc.). The amount of information which can be determined from an impression without a direct comparison is limited. Submission of the possible sources of an impression is required, as well as submission of any test impressions or scaled photographs taken of these possible sources. All evidence submitted should be clearly labeled as to source.

- The test impressions (exemplar prints) of tires are best made while the tires are on the vehicle. These can be made by preparing pieces of white poster board the length of one full rotation of the tire's circumference. A clean board is evenly rolled with fingerprint ink and the tire is rolled across this inked board. The tire is then rolled across a clean length of second poster board (also the length of the tire's circumference). The starting and ending position and the direction of the tire roll must be marked with chalk or crayon on the tire and the poster board. The tire information (position on vehicle, inside and/or outside edge, manufacturer, design name, size, and DOT serial number) should be written on the poster board. Be careful to prevent the rear tires from running over the front tire impressions. The vehicle may need to be turned slightly to prevent such an overlap. The tires should be submitted with the test impressions.

- For all impression evidence, care should be taken to preserve trace evidence before any attempt is made to collect the impression.

Call the laboratory if you have any questions or specific concerns.

FIREARMS EVIDENCE

INTRODUCTION

The number of incidents involving firearms evidence has increased significantly in recent years. The requests for examinations involving firearms, ammunition, and components of cartridges have grown immensely. It is important that the evidence be properly collected and handled in order to expedite and maximize the examination results.

PRECAUTIONS

- Do not pick up the firearm by placing a pencil or some other object in the barrel. Pick up by checkered portion of the grip. Always handle the evidence with gloves.

- Handle the weapon carefully, even if it is on safety or is not cocked. The safety may be faulty or the trigger pull may be very light ("hair trigger"). Place the handgun into a paper bag, envelope, or box for transport back to the workstation.

- If the weapon is loaded, it must be unloaded before shipping to the crime laboratory. If, for some reason, the firearm cannot be unloaded, the submitting agency must call the crime laboratory and determine when and how to hand deliver the firearm to the laboratory.

- If the firearm is to be processed for latent fingerprints, caution is necessary not to smear or destroy the prints and not to wipe off or contaminate potential DNA on the firearm. The submitting agency should call the crime laboratory for instructions if there are questions about latent fingerprints or DNA before packaging and sending the evidence. The submitting agency should call the crime laboratory for instructions before packaging and sending the evidence.

- If a firearm or other metal object is recovered from fresh or salt water, it should be placed in a container of fresh water immediately. Immersion in fresh water will slow the oxidation process and remove the corrosive action of salt water.

- Do not clean the firearm before submitting.

- Do not fire the firearm before submitting.

- **Proper labeling** includes the contents, source, date, time, item number, agency case number, and the name or initials of the collector.

SIGNIFICANCE

The laboratory examination may reveal data about the firearm, ammunition, or components, information regarding the target object, and may contribute information regarding the circumstances of the firearm incident. The examination may determine:

- The caliber of the fired ammunition.
- The type of weapon by examining the recovered bullets and expended cartridge cases.
- If the recovered bullets and expended cartridges cases were fired from a particular firearm.
- Any malfunctioning of a submitted firearm.
- The entrance and exit bullet holes in clothing.
- The approximate distance from muzzle to target.
- Any obliterated serial numbers.
- Bullet trajectories.
- Reconstruction of events.

COLLECTION AND PRESERVATION

- All items should be inventoried. Record the source, date, time, agency case number, item number, and description of the item. Description of firearms should include the serial number (do not confuse with part numbers), make, model, caliber, and the condition when found (i.e., loaded or unloaded, cocked or uncocked, safety on or off, etc.).
- The area of recovery should be measured, sketched, and photographed, showing the positions of the items.
- Unload the weapon, if possible.
- Handle carefully, if trace evidence is present. Do not remove the trace evidence unless the entire object cannot be submitted. Before removing, describe the location of the trace evidence and photograph or sketch the evidence in place.

UNLOADING A REVOLVER

- Place a line on the cylinder on each side of the top strap with a pencil or felt pen prior to opening or moving the cylinder. This will inform the examiner which chamber was at the top.

- While pointing the barrel downward, open the cylinder; before moving the cylinder or removing the cartridges, make a diagram of the cylinder. Number the chambers, starting at the top and going clockwise; note any cartridge in each chamber, whether the cartridge has been fired, and headstamp information, indicating the manufacturer. See example:

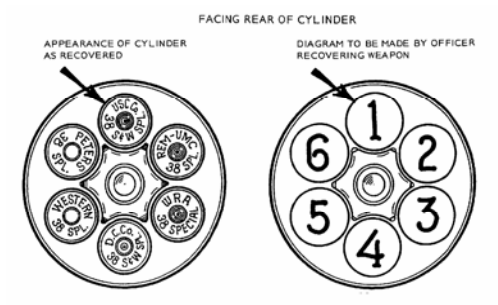

Chamber #	Condition	Headstamp Information
1	Fired	S&W
2	Fired	REM
3	Fired	WRA
4	Loaded	S&W
5	Loaded	WES
6	Loaded	PET

- Each cartridge or cartridge case that is removed must be placed in individual containers. The number of the chamber from which it was removed must be noted on the container.

- The firearm and cartridges must be marked prior to packaging and shipping. Use discreet markings to avoid depreciating the value of the firearm.

- Revolvers may be marked underneath the top strap, on the frame inside the crane hinge, on the frame beneath the cylinder, or on the frame under the grip.

- Unfired cartridges should be marked with an indelible felt tip pen along the case.

- Fired cartridges should be marked with a scribe inside the mouth. Do not mark a fired cartridge on the side.

- **Never** mark the base of a fired or unfired cartridge.

UNLOADING A SEMI-AUTOMATIC PISTOL

- Remove the magazine. Handle the magazine with care, if it is to be processed for latent prints or DNA. Do not remove any cartridges. Mark the magazine. Package the magazine in a paper envelope, small box, etc. Seal and label the container. Submit with the firearm.

- Remove the live cartridges, if any, from the chamber. Mark the cartridge, indicating that it was removed from the chamber, place in a container, and seal and label the container. Submit with the firearm.

- Note the serial number of the weapon for proper identification.

RECOVERED BULLETS, PROJECTILES, AND FRAGMENTS

- Each bullet or fragment recovered from the crime scene should be wrapped separately in tissue paper and then placed in a small box (e.g., a pill box). Seal and label the box. The fine striations on the bullet must be protected. Do not use any cotton material for wrapping—it may be confused with fibers from clothing involved in the case.

- If a bullet is buried in a wall or other object, cut around the bullet. Remove the material containing the bullet. Do not probe the hole or try to dig out the bullet—it may damage the bullet. Wrap, place in a carton, and seal and label the carton.

- Do not touch recovered bullets with bare fingers. Possible traces of blood on the bullet could be contaminated by handling. Use a clean, unused pair of plastic gloves or pick up with clean tissue.

- Shot pellets should be collected and submitted in the same manner as bullets.

- Search for shot shell wads and shot cups whenever a shotgun is involved.

- Shot patterns should be measured, sketched, and photographed. If possible, the surface containing the shot pattern should be recovered.

- Bullets and fragments recovered at an autopsy should be carefully rinsed and dried. Wrap in tissue paper and place in small carton or envelope. Seal and label the container.

FIRED CARTRIDGE CASES AT SCENE

- Consider processing for fingerprints and DNA. Wear gloves to collect the evidence and prevent potential contamination.

- Each cartridge should be wrapped separately and placed in a small carton or envelope.

- Mark the fired cartridges inside the mouth. Do not mark a fired cartridge on the base or on the side.

POWDER PATTERN EXAMINATION

If fired at close range, a firearm will discharge burned and unburned gunpowder particles onto the target surface. The appearance (i.e., the pattern and density of the particles) may assist in establishing the distance between the firearm and the target surface.

- If clothing is submitted, each article must be air-dried and packaged separately. Package the clothing in paper bags or wrap in brown paper. Do not package in plastic bags. Seal and label the containers, noting the contents.

- If the pattern is on skin, 1:1 color photographs of the wound and entire pattern should be submitted, before and after the wound area is cleaned. Close-up photos of the entry and exit wounds should be submitted as well as close-up photos of typical particles in the pattern. Some of the particles should be picked off and folded in a piece of clean paper. The paper should be sealed, labeled, and placed in an envelope. Seal and label the envelope.

- The laboratory should be informed of the locations of the entry and exit wounds found on the body. A copy of the autopsy report is very helpful and should be submitted to the laboratory.

- The suspect firearm and the same type of ammunition must be submitted. The gunpowder pattern on the proximity test target material is then compared to the pattern developed on the submitted clothing.

FIREARM PARTS

- It is important to collect any and all firearm parts found at the crime scene.

- The firearm can be reassembled for testing; a firearm type and manufacture may be identified.

- All of the collected parts may not be from the same firearm.

SERIAL NUMBER RESTORATION

- The serial number on a firearm (as well as office equipment, bicycles, machinery, skis, etc.) may be obliterated to conceal ownership. Chemical processing can often restore the number. Do not wipe or abrade the surface.

SHIPPING FIREARMS AND RELATED EVIDENCE

- Live ammunition cannot be sent through the U.S. Postal Service. Ship by United Parcel Service (UPS) or other carrier.

  All firearms must be unloaded before being shipped or hand-carried to the laboratory. If the firearm is difficult to unload, contact the crime laboratory for assistance.

TOOL MARK EVIDENCE

INTRODUCTION

A tool mark is a mark made by one object on the surface of another solid object. Although these marks are generally made at the entry point of a burglary, various kinds can be found elsewhere, such as fractured knife blades, cut marks on wire, abrasions left on a vehicle, cut marks on a padlock, and machine marks on a metallic surface.

TYPES OF TOOL MARKS

- Some tool marks only show the basic shape of the tool. This type of tool mark lacks specific detail that can single out a particular tool; only the general shape and size of the tool can be determined—wood impressions are often of this type. Since wood will fracture or partially "spring" back, only the general form and size of the tool can be determined.

- The tool mark that is of more value is the type that consists of striations (a series of narrow, fine grooves, some of which are microscopic) and indentations which show the individual characteristics of the tool. These marks can often lead to the identification of a particular tool.

  NOTE: *To examine the tool mark closely, a magnifying lens is helpful. If the tool mark does not have sufficient detail, a decision must be made whether the tool mark is of value and worth expending time and effort to collect and to be examined by the crime laboratory.*

PRECAUTIONS

- Do not attempt to fit a suspected tool into the questioned mark. The tool mark may be damaged, the tool may be altered, and trace evidence may be lost or contaminated.

- Care must be taken to protect the suspected tool so that the face of the tool is not damaged, thus changing the tool mark it will produce. Protect the face of the tool with soft tissue paper.

- Handle the tool with gloves, as DNA might be recovered from a tool left at the scene.

- Protect any trace material on the face of the tool. Paint, metal particles, and other materials from a surface frequently adhere to the tool. The trace material can be compared with samples of the surface containing the tool mark.

- Samples of the surface adjacent to the tool mark must be taken. Later, when the suspect tool is recovered, trace materials on the tool can be compared to the samples taken at the scene. This information can be very valuable, particularly if the tool mark comparison is not definitive.

PRESERVATION OF TOOL MARKS

- When possible, submit the object containing the tool mark. This may entail submitting a drawer, a metal screen door, or cutting out a portion of the object containing the tool mark.

- Close-up photos that include a scale must be made if the object containing the tool mark cannot be submitted. The film plane should be parallel to the tool mark. Oblique lighting will help show up details.

- It is important that the tool mark be kept clean and dry. An exception is when a tool mark on a metal surface is subject to rusting. To retard rusting, coat the tool mark with a film of light oil.

- Casting of the tool mark may be done as a last resort. A cast will never completely replicate the details of the original tool mark. Suitable silicone rubber casting materials, such as Mikrosil, can replicate a significant amount of the details in a tool mark. A formulation with a lesser degree of replication will cause a loss of the finer details in the tool mark and reduce the chances for a definite conclusion.

- Casting should be done by an experienced person. Improper casting may produce a worthless cast and damage the tool mark. DO NOT PRACTICE ON THE EVIDENCE.

TOOL FRAGMENTS

- At crime scenes, burglary tools may break while forcing open a window, door, or drawer. Fragments of the broken tool may be found on the floor or even in the tool mark itself.

- Since these fragments may be very small, a flashlight held obliquely to the floor surface is helpful. A magnet may also be used to locate the fragments that contain iron.

The recovered fragment may be fitted to the suspect's broken tool and constitute what is called a physical match. The physical match may identify the tool as the one used at the crime scene.

INTEGRATED BALLISTIC IDENTIFICATION SYSTEM (IBIS) EVIDENCE

The Integrated Ballistic Identification System, or IBIS, has greatly increased the ability of the Firearms Sections to identify incidents in which the same firearm was used. Often, IBIS can offer new leads in "dead end" cases and reduce the number of unsolved firearm cases.

IBIS is located in the Tacoma, Seattle, and Spokane Crime Laboratories. If there are any questions regarding submissions for IBIS entry, please contact the Firearms Section at one of the three labs that handle firearms evidence.

SUBMISSIONS FOR IBIS ENTRY

The following items may be submitted for IBIS entry:

- Firearms
- Cartridge cases

FIREARMS

Firearms should be submitted as instructed in the Firearms Evidence portion of this manual.

Please send all firearms to the lab to which you normally submit firearms.

CARTRIDGE CASES

Cartridge cases should be submitted as instructed in the Firearms Evidence portion of this manual.

- Cartridge cases for IBIS entry only may be shipped directly to the Tacoma, Seattle, or Spokane Crime Laboratories.
- Cartridge cases that require an examination of any type in addition to IBIS entry must go to the lab to which they would normally be submitted.

Bullets are not being accepted for entry into IBIS.

FORENSIC DOCUMENT EVIDENCE

INTRODUCTION

A document is defined as anything printed, written, typed, etc., relied upon to record or prove something. The role of the document has become increasingly important in a society of contracts, wills, checks, and promissory notes, as well as threat and hate notes, ransom notes, examination papers, and professional records. The authenticity of these documents is often a critical issue to the resolution of a dispute or crime.

Typically, a forensic document examiner examines checks, receipts, anonymous letters, contracts, and bills of sale. The list extends to such unusual documents as voting records and the scrawl on the wall by a dying person.

SIGNIFICANCE

Document examinations may lead to definite conclusions that identify the writer or the device that produced the questioned item.

- Handwriting examinations may identify the writer of a check, letter, or questioned signature.
- Handwriting examinations may disclose that an individual is not the writer.
- Typing is examined to determine the make of machine, and once that suspect machine is located, that machine is examined to see if it is the source of the questioned typing.
- Documents are examined to decipher obliterations and to detect erasures.
- Document examinations may reveal if a document has been altered or is counterfeit.

STRUCTURE OF EXAMINATION

The typical document case has three parts:

- The **questioned** items which are submitted by the investigator. It is always preferable to receive the original of all documents. Examinations can be made from copies; however, the probability of a definite conclusion is reduced.
- Standards (known samples) of the **suspect's** writing.
- Standards (known samples) of the **victim's** writing.

HANDLING AND SHIPPING OF EVIDENCE

Questioned documents generally do not require special handling or procedures. However, document evidence should be protected from excessive handling. There are two notable exceptions that require special handling:

- **Charred** documents require hand delivery. They should be placed in a box lined with cotton. Do not attempt to separate the pages. The Seattle Crime Lab should be should be consulted before collecting and submitting.

- **Indented** writing is the impression of the pen that transfers to the sheets under the sheet with writing. These sheets should be protected from fingerprints, excessive handling, and additional impressions (e.g., do not write on the envelope after placing indented writing evidence inside).

- **Indented** writing evidence must be examined before being processed for fingerprints. Fingerprint processing will destroy indented writing.

HANDWRITING STANDARDS

The standards must be of the same style of writing as the questioned items (i.e., hand printing to hand printing, handwriting to handwriting). **Requested** standards are obtained through use of the Crime Lab Division Handwriting Exemplar Form. The exemplar, when properly used, will provide the forensic document examiner with sufficient writing by the subject to reach a definite conclusion. All four pages of the exemplar are necessary to obtain a representative sample of the subject's writing. Fully one-half of the exemplar is designed for the investigator to dictate to the subject the various signatures, amounts, numerals, phrases, and other writings specific to the case.

You must be familiar with the questioned writing in order to dictate to the subject the correct questioned names, amounts, payees, phrases, or signatures.

- Each questioned signature, name, word, etc., should be dictated to the subject 15 to 20 times.

- The various names, dates, questioned entries, etc., should be dictated in a random manner (e.g., "John Smith, four hundred, John, John, Smith and Johnson," rather than "John Smith" 20 consecutive times).

- The exemplar should be filled out by the subject with a black ink ball point pen. Do not use a fiber tip or rolling marker pen.

- The Forensic Document Section Handwriting Exemplar Form can be obtained by telephoning or writing the Seattle Crime Laboratory (206-262-6020).

- Handwriting exemplars should be packaged and labeled properly as evidence to be submitted to the crime laboratory.

Collected standards are any writings that will be accepted in court as the genuine writing of the subject. Driver's licenses, business records, payroll checks, letters, and diaries are examples of collected standards.

There are some cases where the standard exemplar is not the best sample. The questioned item may not be typical of the normal writing situation. The investigator should obtain writing standards under circumstances similar to those of the questioned writings. For example:

- **Graffiti on a wall:** Have the subject write on a piece of paper taped to the wall.

- **Anonymous writing on unlined paper:** Have the subject write dictated, verbatim samples on unlined paper.

Please contact the Seattle Crime Laboratory **before** submitting a case to be sure that the evidence is proper and complete:

Washington State Patrol
Seattle Crime Laboratory
2203 Airport Way S, Suite 250
Seattle, WA 98134
Telephone No.: (206) 262-6020

LATENT PRINTS EVIDENCE

INTRODUCTION

Latent prints are perhaps the most common form of physical evidence and one of the most valuable. They relate directly to the objective of every criminal investigation and that is the identification of the offender. Because latent prints are fragile and susceptible to destruction, proper collecting, handling and packaging of the evidence are very critical.

PRECAUTIONS

- Item submissions should be for the development of latent prints and/or analysis only. Items not requiring latent print services should not be submitted.
- Wet items should be thoroughly dried at room temperature prior to packaging.
- Liquids in containers should be removed when practical. EXCEPTION: Containers with flammable liquids will not be accepted.
- Perishable food items are to be removed from its container.
- Fragile and/or sharp pointed items (i.e., glass, knife) should be packaged in a container and then packaged in another container with adequate packing material.
- A syringe with the needle attached, razor blade, or other sharps submitted to the crime laboratory will not be accepted, regardless of the packaging.

  NOTE: *The cutting or shearing of a needle from a syringe is completely prohibited by federal and state regulations. [WAC 296-62-08001 (4)(b)(vii)]*

COLLECTING, HANDLING, AND PACKAGING OF EVIDENCE

The types of surfaces from which latent prints can be developed fall into two categories: (1) those which are hard, smooth, and non-absorbent; and (2) smooth, absorbent, and porous.

As a general rule, and with the proper training, it is better to develop and lift latent prints on non-absorbent surfaces. These fragile prints left unprotected on this type of surface are susceptible to destruction if rubbed or brushed against.

Because of their porous, absorbent surfaces, several paper and cardboard items may be packaged into a single container. Latent prints left on this type of surface are "absorbed" and will not be destroyed by contact with another surface.

Biohazard Contamination

- Investigators must use **universal precautions** (i.e., treat all blood and bloodstained objects as sources of bloodborne pathogens and take appropriate protective actions). Immunization shots are available for HVB. Protective gear must be worn to protect the hands. Pointed and sharp-edged objects must be handled with extreme care. Blind searches are definitely to be avoided. Searchers must not place their hands into any space that is not first visually inspected. Eyes must be protected if splashes are likely to occur.

- Any questions should be directed to the following:

  Industrial Safety and Health Division, Department of Labor and Industries, Olympia: (360) 753-6502.

  Safety and Health Hot Line: 1-800-423-7233.

- The outside of the package will require a "**BIOHAZARD**" label or markings.

Post Mortem Prints

- In homicide and death investigation cases, the agency should make every effort to obtain post mortem prints. The laboratory should be contacted if assistance is needed.

- If the fingers are flexible, it is possible to obtain the deceased's prints through the standard ink and card method.

- If rigor mortis has set in, the ink/tape or powder/tape lift method should be utilized. The ink or powder is applied directly to each of the fingers and palms. By placing a strip of transparent tape around each of the fingers and palms, a deliberate recording of the friction skin is made. Each strip of tape is lifted, placed on a clear sheet protector, and labeled appropriately (i.e., R.thumb, L.thumb).

  NOTE: *Each of the prints on the clear sheet protector are in a mirrored position when viewing from the non-adhesive side of the tape strips. Turn the sheet protector over and view the prints through the adhesive side of the tape strips. The prints are in the correct position.*

- In some difficult cases, it may be necessary to remove the hands or fingers from the body. Legal authorization and permission from the family of the deceased must be obtained.

- The agency will notify the laboratory in advance of its intent to deliver the body parts in person. Do not send body parts through the mail or other carrier service.

Bloody Evidence

- If an item requires both latent print collection and collection of blood, please contact the crime lab to decide the best course of action in accomplishing both tasks.

- If latent print processing of an item may affect possible DNA analysis of the item, please contact the crime lab for more information.

Documents

- If an item requires both latent print and document examinations, priority should be given to the latter.

- Handwritten evidence in certain inks must be examined before being processed for latent prints. Chemical processing ~~will~~ may cause these inks to run or bleed.

- Indented writing is the impression of the pen that transfers to the sheets under the sheet with writing. The item must be examined before being processed for latent prints. Latent print processing will destroy indented writing.

- A few agencies are chemically equipped to process items for latent prints. If the latent print processing is completed by the submitting agency, a notation should indicate so.

- The number of pages in every book and magazine submitted to the crime laboratory varies. If more than processing the cover for latent prints is needed, indicate how many of the pages are to be included.

Firearms

- If the firearm is to be processed for latent prints, caution is necessary not to smear or destroy the prints. The submitting agency should call the crime laboratory for instructions before packaging and sending the evidence.

- Evidence labels should not be placed on areas of the weapon that are receptive to latent prints.

- Unload the weapon, if possible. If unloading a semi-automatic pistol, remove and carefully handle the magazine if it is to be processed for latent prints. Do not remove the cartridges from the magazine.

- Live ammunition cannot be sent through the U.S. Postal Service. Ship by United Parcel Service (UPS).

- All firearms must be unloaded before being shipped or hand-carried to the laboratory. If the firearm is difficult to unload, contact the crime laboratory for assistance.

- ~~All weapons and ammunition must be hand delivered to the Latent Prints Laboratory. Please contact the crime laboratory for assistance in unloading firearms.~~

Lift Cards

- After a powder-developed latent print has been lifted and placed on a card backing, that card should be properly identified. Written information should include the date, crime type, case number, crime scene location, name of the person who made the lift, location of the lift, and the type of object.

- A simple sketch of the object to describe the location from where the lift was made can be an addition to written information.

- Using small directional arrows are helpful in orienting the placement of a latent print.

- Any of the officer's prints appearing along the edges of the tape should be crossed out and initialed.

- Several lift cards can be packaged into a single paper or plastic evidence container with the exception of clandestine laboratory evidence (see submission of evidence from clandestine laboratory on page 11-5).

- Inked elimination prints are prints of those persons having legal access to an area. If these prints are placed on a card backing, properly mark the cards as "elimination prints."

- Lift tape and card-backing supplies are available commercially from several sources. One of the supply firms is as follows:

  Lightning Powder Company, Inc.
  1230 Hoyt St SE
  Salem OR 97302-2121
  Telephone No.: 1-800-852-0300

Submission of Controlled Substances Evidence to the Latent Prints Laboratory

When latent print processing is requested on materials surrounding a suspected drug sample, the agency submitting the sample(s) is requested to remove the suspected drugs and package them separately. The surrounding container can then be submitted to the Latent Prints Laboratory and the

suspected drugs can be submitted to the agency's local crime laboratory. The only equipment needed to perform this task is disposable gloves. If you have any questions about this procedure, contact the Latent Prints Laboratory at 360-705-5988. A qualified forensic scientist will assist you.

If it is determined by the Latent Prints Laboratory and the submitting agency that manipulation of the packaging surrounding the suspected controlled substances might damage potential latent print evidence, then the sample in its original packaging can be submitted to the Latent Prints Laboratory. An example of this situation would be suspected prints on plastic capsules. Please call the Latent Prints Laboratory prior to the submission of evidence containing controlled substances.

Your assistance with this process is appreciated. By taking these few steps prior to the submission of the evidence, analysis within the laboratory will proceed quickly and smoothly.

The major exception to this policy is potential latent print evidence associated with a suspected clandestine laboratory.

Submission of Evidence From a Clandestine Laboratory

When latent print processing is requested on items recovered from a suspected clandestine laboratory such as glassware, plastic baggies, and chemical containers, please call the state/local SIRT team for assistance. The Latent Prints Laboratory is unable to accept these items due to safety considerations for laboratory personnel. If you are unable to contact a SIRT team, please call the Latent Prints Laboratory for assistance.

Proper packaging of latent lift cards taken from evidence suspected to be contaminated by materials from a clandestine laboratory is very important to the health and safety of laboratory personnel.

To package the lifts properly, please seal each latent lift individually in a plastic envelope or bag that has not been exposed to potential contamination at the clandestine laboratory crime scene. (To prevent contamination of the envelope or bag the lift is sealed in, the packaging of the lift(s) should occur in an area that has been designated a "safe zone.")

If improper packaging is apparent, the Latent Prints Laboratory cannot accept the evidence. The submitting agency will be contacted, the situation clarified, and the evidence returned to the agency for repackaging.

~~Controlled Substances~~

- ~~Those items recovered from a clandestine drug laboratory requiring latent print processing will be completed at the crime scene location. Items are not to be submitted to the crime laboratory and will not be accepted, with exception given to latent lift cards.~~

CONTROLLED SUBSTANCE EVIDENCE

Controlled substances are a major part of the crime laboratory caseload. These drugs are physical evidence not only in illegal possession and sale cases, but also in such varied cases as burglaries, traffic fatalities, and assaults. For efficiency and accuracy, it is imperative that the evidence be selected, packaged, and forwarded in a careful manner.

PRECAUTIONS

- Do **not** submit any hypodermic needles, razor blades, or other sharps. The crime laboratory will not accept any case that includes a needle or a syringe with the needle attached.

  NOTE: *The cutting or shearing of a needle from a syringe is completely prohibited by federal and state regulations.* [WAC 296-62-08001 (4) (b) (vii)]

- Many drugs are very potent, and even minute amounts present a health hazard. Do not taste or hold the suspect material close to the nose in order to smell it. Do not eat, drink, or smoke while handling the material. Be sure to exercise good personal hygiene when handling suspected substances by washing the hands thoroughly after handling, even if direct contact was not made. Use appropriate protective equipment (gloves).

- Small amounts of material must be handled with care to avoid contamination and loss.

- If green or wet plant material is stored in a tight wad or pile, the biological degradation process may generate sufficient heat to produce a fire hazard.

FIELD TESTS

Drug field test kits are **presumptive** tests (i.e., a positive result indicates a possibility that the substance being tested for is present). They are **not** conclusive tests which prove the presence or absence of a particular drug. These kits are useful in establishing probable cause and enabling the investigating officer to obtain a search warrant or an arrest warrant.

If the amount of suspected material is very small, a field test may consume too much of the sample and prevent further testing by the crime laboratory. In such cases, it is best not to perform a field test, but to send the material to the crime laboratory for analysis.
Do not send the used drug field test kit to the crime laboratory—the reagents are corrosive and likely to spill during shipping; the resultant colors fade and are not recognizable. The crime laboratory will confirm your field test results by analyzing the submitted evidence.

PLANT MATERIAL

Marihuana (*Cannabis sativa*) — The State Legislature has mandated that the crime laboratory "...shall **not** provide tests for marihuana to cities and counties **except** (1) to verify weight for criminal cases where weight is a factor, or (2) for criminal cases that the prosecuting attorney and field administrator [manager] of the crime laboratory agree are likely to go to trial" [emphasis added].

The Crime Laboratory Division conducts training in leaf marihuana identification at least annually. If your department plans to send a candidate for training, notify Crime Laboratory Division Headquarters (see roster for address and phone number).

If your agency does not have a certified Leaf Marihuana Identification Technician, it is suggested that the nearest agency having a technician be contacted for assistance. In cases of hardship, contact the crime laboratory servicing your area.

Other Plant Materials — Other plant materials include psilocybin mushrooms, opium poppy, khat, and peyote.

Suspected khat (methcathinone) should be frozen immediately and delivered to the laboratory in a manner that minimizes thawing. Call the laboratory if you have any questions.

For marihuana and other plant material, completely dry the plant material at room temperature. Fans should be considered if air circulation is poor. When dried thoroughly, place in a paper sack, box, or paper envelope. Avoid loose mesh bags as contents (plant particles and fragments, dirt, etc.) may sift through the mesh holes. Do not place the dried plant material in a plastic container or a plastic-coated container. If not dried and packaged properly, the material may rot and prevent or interfere with any analysis. Never submit wet plant material in a plastic container.

If a large amount of plant material is confiscated, it is not necessary to send all of it to the crime laboratory. A representative sample of the plant material should be selected and dried, if necessary, and sent to the crime laboratory. Careful notes should be taken as to the total amount (weight) of material confiscated and the amount and locations of the sampling. If there is a question as to how to take a representative sample or the amount of the sample to be collected, contact the crime laboratory for assistance.

SOLID DOSAGE FORMS AND POWDERS

Solid dosage forms of evidence include pills, powders, tablets, chunky material, tar-like substances and blotter paper. Drug paraphernalia includes pipes, measuring scales, balances, sifters, bowls, spoons, and a variety of other objects used, or intended to be used, with controlled substances.

- Make sure each item is contained within appropriate packaging before sealing in the final evidence envelope or container. Do not put loose powder, tablets, or any other small or breakable objects directly into the final evidence envelope. This packaging should include the case number, item number, officer's initials, and date.

- Make sure the outer envelope or package containing the item(s) is thoroughly sealed (i.e., all seams are taped and initialed and properly identified) and labeled properly.

- Use the Request for Laboratory Examination form (3000-210-005).

  — Make sure to list the items in order of priority (i.e., the order in which you want the items to be examined).

  — Write the item numbers clearly.

  — Do not list substances as a particular drug. Instead, list substances as "suspected cocaine" or "suspected of containing heroin."

  — Describe any special precautions to be taken, such as biohazards or future latent print examination.

LIQUID SAMPLES

Liquid samples include contents transferred from syringes, injectable solutions and steroids, some precursor materials, and other controlled substances.

Liquids should be stored in vials or bottles with secure, non-leaking lids. Plastic flip-top vials are good for small quantities. Vials and bottles should be packaged to prevent breaking. As with all other types of evidence, the items should be sealed and labeled properly.

PROCEDURES FOR DRUG EVIDENCE RETRIEVED FROM BODY CAVITIES

Drug evidence recovered from anal, vaginal, and oral cavities presents a serious health hazard to both law enforcement and crime laboratory personnel. To keep these personnel from being placed in jeopardy, the Crime Laboratory Division has instituted procedures affecting law enforcement personnel for dealing with this type of evidence.

Controlled substance evidence removed from a body cavity is usually packaged in some type of protective material, such as a balloon, condom, or plastic bag. Certain steps need to be taken to decontaminate the outside of this container, both to protect personnel from biohazards and to eliminate malodorous decomposing bodily substances.

The following procedures must be used for decontaminating evidence which is packaged as described above:

- Place the evidence (in its protective material) in a container of fresh bleach solution (1 part household bleach and 10 parts water) and soak for at least 15 minutes. Rinse thoroughly with running water. Dry carefully with a paper towel. Place in a clean container and label the container "From Body Cavity" and "Soaked in Bleach Solution." It may be submitted to the crime laboratory for examination of the contents. The clean container will not require a biohazard label.

- If you have reason to believe that the wrapped evidence may leak and be attacked by the bleach solution, do not use the above method. If possible, transfer the suspected controlled substance to an appropriate container or call the crime laboratory for an alternate procedure.

- Be sure to note on the laboratory request form AND on the evidence packaging that (1) the item of evidence was removed from, or suspected of being from, a body cavity, and (2) that it was soaked in bleach solution to render it in proper condition for submission.

The clean container will be safe for handling by law enforcement personnel who must come into contact with, transport, and store the evidence. Disposable gloves and other personal protective equipment should be used while handling the contaminated container. Do not contaminate the outside of the clean container.

Controlled substance cases involving evidence found to be removed from a body cavity and not properly processed before being submitted will be returned to the law enforcement agency without further examination.

If there is any difficulty or question regarding the above procedure, contact the crime laboratory before processing with the bleach solution.

DISPOSAL OF CONTROLLED SUBSTANCES

The crime laboratory does not destroy or dispose of any controlled substances or any other submitted evidence, even if it is determined not to contain a controlled substance. All submitted evidence—except that which was consumed in the analysis—will be returned to the submitting agency.

CLANDESTINE LABORATORY ANALYSIS AND WSP SUPPORT

As soon as there are good reasons to believe a clandestine laboratory exists, the investigator must not enter the premises. If you have already entered, vacate the area immediately. Do **not** smoke. Do not turn any electrical switches on or off; leave them as they are. Do not shut off any running water. Do not pour any water on any equipment or material—some chemicals will burst into flame or explode when in contact with water. If equipment is operating or "cooking," leave it as is. Many of the chemicals involved are toxic, flammable, and even explosive.

Because a suspected clandestine laboratory potentially contains many chemical and physical hazards, these sites are treated as hazardous material incidents and the safety rules governing their processing will apply. These rules are dictated by OSHA, WISHA and Washington State Department of Labor and Industries. Only those personnel who are trained and qualified to use personal safety equipment (hazardous material protective clothing, SCBAs and respirators) are permitted to work in this kind of environment.

There are several well-trained teams throughout the state that have the expertise, equipment and necessary certifications to handle and process clandestine laboratories.

A CLANDESTINE LAB TEAM SHOULD BE CONTACTED IMMEDIATELY FOR ASSISTANCE.

The Washington State Patrol provides clandestine laboratory assistance through its SWAT team anywhere in the State.

To contact WSP-SWAT at any time, call:
Washington State Patrol Narcotics
Olympia
~~(360) 753-6800~~ (360) 704-2400

WSP-SWAT consists of specially trained investigators and forensic chemists who have the proper safety gear and equipment to enter and investigate a clandestine drug laboratory. While waiting for SWAT to arrive:

- Secure the surrounding area. Do not allow anyone to enter.
- Follow any instructions that the Team may provide.
- Treat the clandestine laboratory and surroundings as a crime scene. Any physical evidence—such as tire or foot impressions, fingerprints, records, and vehicles—must be protected for later evaluation and collection.

COLLECTION OF EVIDENCE AT A CLANDESTINE LABORATORY

The collection of evidence at a clandestine laboratory focuses on documenting the chemical reagents and chemical hardware present. Samples need to be collected from reagents, reaction mixtures, and possibly wastes and residues for later analysis. An inventory of all laboratory related materials should be submitted to the crime laboratory along with the samples. This will enable the chemist to evaluate the method of manufacture used and potential production capacities.

In conducting an analysis of clandestine laboratory samples, very little material is actually needed. The only substances that should be collected in their entirety are suspected finished product or other controlled substances. Actual weights or volumes of the materials being sampled should be recorded. Estimates based on container size (such as "a one quart jar, half full") are acceptable. Residues in filter papers may be collected by taking the entire filter paper or a representative number if there are several. All samples should be clearly labeled with item numbers.

Factory sealed reagents do not need sampling but should be photo documented and included in the inventory. All samples should be collected in duplicate and over-packed in separate metal cans with an absorbent material for storage and preservation. One of the sample cans is submitted to the WSP Crime Laboratory and the other is stored by the submitting agency. Identification of what needs to be sampled is often difficult and best left to an experienced chemist if available.

Training in clandestine lab sampling may be provided to detectives who have taken an appropriate safety course. If you are unsure of how to handle any materials encountered in a clandestine lab, it is important to contact the crime laboratory and speak to a chemist.

SPECIAL NOTE ON HANDLING ANHYDROUS AMMONIA

Recently, the Governor signed into law an amendment to RCW 69.50.400. This law relates to the illegal transport and storage of anhydrous ammonia. It is common practice for illicit drug manufacturers to take propane tanks and fill them with anhydrous ammonia. This compound is then used in the production of methamphetamine. Common propane tanks were never intended to store anhydrous ammonia. The fittings around the nozzle of the tanks are readily corroded by this compound, causing potential leakage of ammonia gas.

Proper training and safety equipment are needed to handle and test these tanks. TANKS IN THIS CONDITION ARE A SERIOUS POTENTIAL HEALTH HAZARD – DO NOT SUBMIT THEM TO THE CRIME LABORATORY FOR ANALYSIS. Contact your local Crime Laboratory or WSP-SWAT for information on preliminary testing and documentation. Disposal information can be obtained from the Department of Ecology (1-800-258-5990).

FIRE DEBRIS EVIDENCE

INTRODUCTION

Arson is an extremely difficult crime to investigate. The site is often a smoldering, charred mass on the verge of collapse. To compound the problem, most of the evidence is altered or destroyed by heat and smoke and soaked with water or other chemicals from fire suppression. The primary role of the crime laboratory is to identify flammable liquids or residues remaining in the aftermath of the fire. The crime laboratory also seeks to find inorganic residues of explosives and incendiary materials.

PRECAUTIONS

- It is important that the crime laboratory be called if there are any questions concerning the procedures for collecting and packaging fire debris evidence.

- Keep alert for evidence which may indicate that an attempt is being made to conceal another crime.

- The search for flammable liquids must not be delayed, since they may be lost through evaporation, weathering, or bacteriological degradation.

- Use of a vapor detector ("sniffer") or K-9 may be helpful. Many flammable liquids do not have a noticeable odor. Other solvents may be masked by the odor of burnt materials. The human nose loses its sensitivity to certain odors when exposed to large quantities of scents for an extended period of time.

- Evidence suspected of containing traces of flammable liquids must be packaged in vapor tight containers.

- Each container must be properly labeled and sealed. The containers must be sealed with tape extending across the top of the container and down the sides. The tape must be initialed so that the initials are across the tape onto the container.

SIGNIFICANCE

Laboratory examination of the evidence may reveal:

- The presence and nature of a flammable liquid which may have been used to accelerate the fire.
- The manner and area where the fire was set.
- The connection of a suspect with the arson scene through comparison of flammable fluids, trace evidence, and latent prints.
- The presence of another crime which the fire was planned to conceal, such as a homicide or fraud.

COLLECTION

- Flammable liquid evidence (fire debris):
  - — Locations: protected areas (under furniture, floor moldings and joists, in cracks); lower surfaces, since liquids flow downhill; porous materials (carpet and padding, wood); soil, unsealed concrete, flooring and sub-flooring.
  - — Methods: cut cross-section through and below suspect area or pour pattern, if possible. **Do not** use a gas-powered saw or generator near the sample area.
  - — Comparison Sample: a sample of the same substrate as the samples collected from the origin of the fire, without the suspected accelerant.
- Flammable liquids:
  - — Locations: cans, bottles, porous materials, surface of puddles.
  - — Methods: pipette, pour, or siphon into proper container; blot or skim surfaces with paper towel or gauze.
- Molotov cocktails:
  - — Package flammable liquid and wick separately from the bottle, jar, or glass fragments. If there is no visible liquid, the wick remains are more likely to contain residue than the glass.

— If fingerprint examination is desired, the glass should be stored so it can dry out rapidly. Fingerprints are dissolved by flammable liquids.

— If there is insufficient liquid, seal the glass in a vapor-tight container. Separate the larger pieces, which are most likely to contain latent prints for drying and fingerprint processing. If there is not enough glass to process for both prints and for liquid analysis, a decision must be made as to which of the processes to sacrifice.

- Burned, charred paper (for document examination):

  — **Before** proceeding, call the Forensic Questioned Documents Section, Seattle Crime Laboratory, for instructions (206) 262-6020.

  — Handle as little as possible. Leave charred paper where found if in a box, drawer, or wastebasket.

  — If repackaging of charred paper is necessary, place them loosely in a rigid container lined with cotton. Use gloves so as not to leave your own fingerprints.

  — Hand-carry. Do **not** mail.

  — If an analysis for volatiles is desired, seal papers in a new, unused paint can. If other examinations are desired, call the crime laboratory **immediately** for instructions.

  — Label all containers as **fragile.**

- Soil samples:

  — Freeze all soil samples after collection. Refrigerate if unable to freeze. Bacteria in the soil can destroy petroleum-based products; low temperatures will retard bacterial action.

- Clothing and cloth:

  — Gloves, shoes, and pants are the most likely to have flammable liquid stains and spills. If possible, retain all of the suspect's outer clothing.

  — Package in the same manner as flammable liquid evidence. Do **not** fill the entire can with the garment; cut the garment into pieces, if necessary. Leave at least 1/3 of the can empty.

  — Clothing removed from a body needs to be frozen after packaging in a vapor-tight container.

- Solid accelerants:

  — Package in plastic or paper bags, metal cans, or if sharp or jagged edges are present, package in a rigid container that will not be punctured or torn. If the solid accelerants are found with petroleum products, call the crime laboratory for handling and packaging instructions.

PACKAGING

It is important that the correct container is used to package the evidence. It is best to keep a variety of containers in several sizes on hand. Flammable liquid residue evidence should **not** be stored in plastic containers or containers with plastic lids. Nylon and some polyester bags are an exception when properly sealed and have been shown to be free of contamination.

- Screw-top vials with Teflon-lined caps should be used to hold liquids of larger quantities (more than a milliliter) and should be packaged so they remain upright.

- Clean, paint-type, unused, metal cans are preferable for storing liquid residues. Paint cans should be filled between 1/3 and 2/3 full. Never fill the can completely.

  — **Advantages:** Cans are easily obtained, inexpensive, unbreakable, available in various sizes, and almost always maintain an airtight seal. Avoid using cans which are lined with a gray Teflon coating. Use unlined or green epoxy-lined cans.

  — **Disadvantages:** Cans may rust through, rather rapidly on occasion, and must be checked daily. They are bulky and do not nest. Once sealed, the evidence cannot be readily inspected.

  — Use a hammer or rubber mallet to tap around the circumference of the lid for a proper seal. Keep debris out of the sealing groove. Inspect the seal to make sure the lid is completely seated.

  — Several local manufacturers sell these cans. When a batch of cans is ordered, it is a good idea to send the crime laboratory an empty control can for examination.

- Kapak polyester bags and nylon bags designed specifically for fire debris evidence (and other kinds of volatile evidence) are acceptable.

  — **Advantages:** Bags are relatively inexpensive, easy to store, available in a variety of sizes, and are particularly useful for large bulky items. Evidence is readily visible.

  — **Disadvantages:** Bags can be punctured by sharp objects from the interior and/or exterior during handling. Sealing requires a heat-sealer (and source of electricity), and can be awkward at a scene.

— Polyester and nylon bags require special care to seal properly. The seal should be inspected closely to make sure it is complete and vapor tight.

— Properly sealed cans may be placed inside these bags if can rusting is a concern. Alternately, properly sealed Kapak or nylon bags can be placed in metal cans to protect the bags.

- Glass jars are not recommended.

  — Jars are breakable, difficult to store, and may not provide a good seal.

CONTROLS/COMPARISON

A sample of material from the fire scene which is identical to the evidence submitted but does **not** contain any flammable liquid is necessary. This sample, called a **comparison sample,** is collected from an area adjacent to the area where the evidence is collected and must be uncontaminated by the suspect flammable liquid.

- Locations: From a protected area in the same room as the fire origin; from the room next to fire origin; or from outside of a clearly defined pour pattern.

- Precautions: A comparison sample is easily contaminated by walking through a pour pattern and then through the control area; by water run-off; by condensation of a volatile which evaporated from another area of the scene; by using contaminated gloves, tools, or utensils to collect the comparison sample. It is difficult, if not impossible, for the investigator to always collect an uncontaminated comparison sample. To help avoid contamination, collect the comparison sample first, then the suspect sample.

ADDRESSES FOR KAPAK AND GRAND RIVER PRODUCTS

Kapak Corporation
5305 Parkdale Drive
Minneapolis, Minnesota 55416-1681 USA
Phone – (952) 541-0730 or (800) kapak-57

NOTE: *Kapak is on the Internet at www.kapak.com*

Grand River Products

~~P.O. Box 526~~	444 Lexington Road
~~Mt. Clemens, Michigan 48046~~	Grosse Point Farms MI 48236
~~Phone - 810.463.7420~~	Phone (313) 881-7861
	Fax (313) 881-7876
	Contact: John Vismara

Additionally, these products may be available through a local scientific supply dealer.

EXPLOSIVES

INTRODUCTION

The Crime Laboratories in Seattle, Tacoma, Spokane, and Marysville can conduct analyses of explosives evidence including post-blast debris, bulk explosives, components of explosive devices, and **deactivated** explosive devices. Each of these types of evidence can provide information about how a device was made (or could have been made) and can also provide links to individuals of interest to an investigation. The manner in which this evidence is collected, packaged, and submitted to the laboratory is one of the most important factors that will determine how much information the laboratory can provide about the evidence.

BULK EXPLOSIVES

Bulk explosives may be single chemical compounds or they may be mixtures of substances that together are explosive. Explosives can be commercial or military products, or they may be homemade mixtures. Crime laboratory analysis of bulk explosives can identify the components of an explosive, and in some cases, provide information about the possible source of the explosive. In some cases, distinguishing characteristics of an explosive sample can be linked to explosives or individual chemicals in a suspect's possession.

POST-BLAST DEBRIS

Debris from an explosion may be burned, buried in rubble, and/or scattered over a wide area. Pieces of an explosive device may be thrown farther from the site of an explosion than one might think. An extensive search of the surroundings and painstaking sifting through rubble may be required to obtain important evidence. This evidence may include fragments of the explosive device itself (e.g., pipe fragments, blasting caps, electrical components) or chemical residues deposited on objects near the explosion. Crime laboratory analysis can often determine what explosive material was used in the device, and may sometimes provide information about the general construction of the device, and how the device was initiated. In some cases, unusual or distinguishing characteristics of the explosive or the device can be linked to materials in a suspect's possession.

COMPONENTS OF EXPLOSIVE DEVICES AND DEACTIVATED DEVICES

Components of explosive devices may include tape, glue, containers, pipes, fuses, wires, blasting caps, clothespins, clocks, remote controls, etc. Many everyday items can be used in the construction of an explosive device, and nothing about these items may be suspicious or sinister in itself. When found together with bulk explosives, or when found partly assembled, the particular combination of materials found may suggest how these materials might be combined in an explosive device.

Unexploded devices, and the individual components of a device, will often provide the best evidence to link an individual to a bombing attempt. Fingerprints will often be intact, tape and glue will not have burned away, wiring and fusing will be undisturbed. In such cases, chemical analysis along with trace examination and fingerprinting can provide a more complete picture of the device, and there is a much greater chance of connecting the device to an individual.

COLLECTION AND PACKAGING OF EXPLOSIVES EVIDENCE

- **Do not submit active devices to the laboratory**. Active devices, including blasting caps, should be dismantled, deactivated, or discharged in some way before submission to the laboratory. Call your local bomb squad or the Washington State Patrol Bomb Unit to deactivate the device. Make note of what method was used to deactivate the device (e.g., water cannon, blown up with dynamite, etc.), and provide this information when submitting the evidence.

- Items with sharp or jagged edges should not be packaged in paper envelopes. Use sturdier containers such as clean metal paint cans.

- Many explosives, particularly "high" explosives, contain components that are volatile and will evaporate over time. If it is suspected that high explosives (e.g. dynamite, nitroglycerin, C4, etc.) may be present, evidence should be packaged in a vapor-tight container. Clean metal paint cans or vapor-tight plastic bags (such as Kapak bags) are suitable to preserve volatile evidence.

- Submit only small amounts of bulk explosives. Be sure to include representative samples of the bulk material, especially if there are indications of mixtures. Typically a teaspoon of material is sufficient for laboratory analysis of bulk explosives.

- Flash powder can be very sensitive and may ignite with a spark. If possible, package flash powder in anti-static plastic bags, made for use with static-sensitive computer components; or use paper packages, making sure to completely seal all openings and seams – flash powder is a very fine powder and will seep out of very small openings. Do not package bulk flash powder in metal containers or plastic bags not designed to be static-resistant.

- Whenever possible, submit control samples in a separate package along with the evidence. For example, if soil from a blast site is submitted, also collect a sample of similar soil from an area away from the seat of the blast. If a portion of rubber molding with blast residues is submitted, also submit a clean area of the molding. Package controls in the same manner as samples with residues – the manner in which a piece of material is packaged can affect the analysis (e.g., bacterial action in soil over time).

- Porous materials or objects with cracks and ridges tend to collect a large amount of useful residues. Materials from near the blast site such as foam, rubber, pipe threads, cardboard, or any rough-surfaced items will often be useful items to collect.

- If fingerprint analysis is desired, submit the items to the crime laboratory first. Indicate clearly that a fingerprint examination is needed. The crime laboratory can usually forward evidence to the latent prints laboratory after the explosives analysis is finished.

- Give the laboratory as much information as possible about the circumstances of the case. If evidence is from a blast scene, send pictures, diagrams, witness statements, officer's reports, etc. If a suspect has been interviewed or a premises searched, send information about what the suspect may have been involved with, including internet recipes, jars of chemicals recovered, statements from the suspect about what kind of device he was making, etc. The more information the laboratory has about the circumstances of a case or the source of a particular item of evidence, the better able we will be to help investigate an incident.

- The person who collects explosives evidence must be free of contamination. If the individual collecting evidence has been involved with explosives recently, they should wear clean clothing including footwear. Hands should be washed and gloves should be worn. If very small amounts of explosives residues are involved, alcohol swabs and water swabs (with controls) should be taken of the evidence collector's hands and shoes, before any evidence is collected. Submit these swabs along with the evidence.

- For larger scale incidents than are typically encountered, assistance may be required from an agency with more resources at its disposal than any local agency or the state crime laboratories. For scenes beyond the capabilities of local responders or the laboratory, it may be necessary to contact your local BATF or FBI office. The BATF and FBI can provide scene response, investigative assistance, and laboratory services in cooperation with local agencies and the state crime laboratories. When in doubt, call the state crime laboratory, and a BATF or FBI field office.

If any questions arise about evidence collection or about what services the laboratory can provide, call the state crime lab for assistance and advice.

Recommended Guidelines
Sexual Assault Emergency Medical Evaluation
Adult and Adolescent 2006

Table of Contents

I. **General** 1
Purpose of Exam, If the assault occurred within prior 96 hours, If Assault was more than 96 Hours Prior, Patient centered care, Special populations, Coordination with law enforcement and advocacy, Role of the medical provider in the legal process, Registration and Billing

II. **Consent for Care, Mandatory Reporting, and Confidentiality** 5
Consent for Care Adults, Refusal of care, When the patient is not able to consent, Consent for Care – Minors , Mandatory reporting, Confidentiality for minors, Vulnerable adults-Mandatory reporting, Diagnosis, Authorization for release of confidential health information, Documentation

III. **Triage, History and Initial Evaluation** 8
Triage, Initial information, History of assault, Strangulation, Past Medical History and Review of Systems, Discussion with Patient

IV. **Medical Examination** 10
General Information, Exam Procedures, Genital exam – Female, Genital exam - Male.....Anal exam Male and female

V. **Pregnancy, STD and Toxicology Testing** 12
Pregnancy test, STD tests, HIV Testing, Vaginal wet mount, Toxicology tests

VI. **Evidence Collection Principles** 13

VII. **Evidence Collection Steps** 14

VIII. **Forensic Evidence Processing and Storage** 17

IX. **Medical Photography** 19
General, Technique, Body photos, Bite marks, Colposcopy,Photo Storage and release

X. **Treatment and Discharge** 21
Emergency Contraception, Std Prophylaxis, Hepatitis B Vaccine, Tetanus Prophylaxis
HIV post-exposure Prophylaxis (pep), Discharge

XI. **Follow Up Medical Care** 23

XII. **Post Assault Medications** 24
Recommended Medications, For Penicillin Allergic Patients, Emergency Contraception

XIII. **Supplies Needed for Medical / Forensic Exam** 25

XIV. **Sample Exam Process** 26

XV. **Washington State Community Sexual Assault Programs** 27

XVI. **Key Contacts** 29

XVII. **References** 29

XVIII. **Washington State Laws** 30

Recommended Guidelines
Sexual Assault Emergency Medical Evaluation
Adult and Adolescent

The following are guidelines for conducting the medical-legal examination and collecting forensic evidence for adult and adolescent male and female patients when there is a report or concern of sexual assault. These guidelines were developed by a working committee which included representatives from medical specialists, sexual assault nurse examiners, attorneys, forensic scientists, and law enforcement.
These guidelines are not intended to include all the medical evaluations and tests which may be necessary for care for an individual patient. Likewise, not all the steps outlined here will be appropriate for every patient.

I. General

PURPOSE OF EXAM

Medical

- Identify and treat injuries
- Assess risk of pregnancy and sexually transmitted diseases
- Document history
- Document medical findings
- Provide prophylaxis for sexually transmitted diseases and emergency contraception, when indicated

Social/Psychological

- Respond to patient's immediate emotional needs and concerns
- Assess patient safety and assist with interventions
- Provide information about typical reactions, fear reduction and coping strategies
- Explain reporting process and Crime Victims Compensation

Forensic and legal

- Collect forensic evidence
- Preserve evidence integrity and maintain chain of custody
- Transfer to law enforcement with appropriate consent
- The medical provider may be called as a witness in a criminal or other proceeding and should be prepared to testify in an objective and unbiased manner

Refer/Report

- Refer for follow-up medical care
- Refer for advocacy or counseling
- Assist with report law enforcement as requested by patient
- In cases of minors or vulnerable adults, report to appropriate authorities as required by law (see Mandatory Reporting, below)

IF THE ASSAULT OCCURRED WITHIN PRIOR 96 HOURS

In general, the medical – forensic exam is indicated on an urgent basis when the assault or suspected assault occurred within the prior 96 hours

- This time frame is not rigid – in some circumstances the reasonable time frame may be longer
- Telephone triage – advise patient
  - Do not bathe before exam
  - Bring in clothes worn at time of assault, and bring in change of clothing
  - The exam and wait time may be several hours
  - Bring a support person (family, friend, advocate) if possible

IF ASSAULT WAS MORE THAN 96 HOURS PRIOR

- Medical/forensic exam is generally not indicated on emergency basis
- In certain circumstances a forensic exam may be appropriate even after 96 hours. Examples include:
  - Cases of abduction
  - Cases of suspected abuse of vulnerable adults
  - To document body injury or severe genital or anal injury.
- This decision should be made by the medical provider in consultation with social work and law enforcement, when needed
- Refer to Washington State Community Sexual Assault program (see Section XVI) or mental health counselor for psychological support
- Refer to primary care provider for needed medical care
- Inform patient that emergency contraception may be effective in decreasing the risk of pregnancy up to 5 days (120 hours) after unprotected intercourse
- Advise or assist patient in making police report in accord with patient's choice
- Assist in making mandatory report regarding vulnerable adults and minors

PATIENT CENTERED CARE

The medical forensic exam is done by the healthcare provider for the benefit of the patient

- These are priority patients and should be triaged for care immediately after those with life-threatening illness or trauma
- Patients should be moved to a private setting as soon as possible – this exam should not take place in a multi-bed room
- Each step in the process should be explained to the patient
- The patient may decline any aspect of the examination or evidence collection
- The health care provider must adhere to laws governing health care such as HIPAA regulations, as well as to ethics and standards of medical and nursing professions
- The patient may have difficulty deciding immediately whether he/she wants to make a police report.
- Procedures should be in place to allow evidence to be saved for a limited time to allow this decision

SPECIAL POPULATIONS

- Special populations such as the elderly, non-English speaking individuals, male victims, or psychiatrically or cognitively impaired patients require special sensitivity and skills to provide optimal care
- Medical interpreters should be used for non-English speaking patients

COORDINATION WITH LAW ENFORCEMENT AND ADVOCACY

- Medical staff must obtain patient consent before discussing the case with law enforcement, advocates, or others
- With patient consent it often most efficient to coordinate some tasks: e.g., photographs of body injuries may be taken by law enforcement, safety planning can accomplished by the advocate

Law enforcement

- The exam may be done before or after a police report is made, or when a report will not be made
- Reporting to law enforcement is the patient's choice, unless the patient is under 18 or a vulnerable adult (see Mandatory Reporting, below)
- In general it is inadvisable for medical providers and law enforcement to obtain the history from the patient together, as this may make the medical information "testimonial" in legal terms

Social work

- If social worker is available, coordinate regarding psychosocial assessment, safety planning, and coordination with agencies

Advocacy

- The patient may choose to have a support person (family, friend, advocate) present during the medical history and exam[1]
- Refer to a Community Sexual Assault advocacy program before discharge (see Section XV)

ROLE OF THE MEDICAL PROVIDER IN THE LEGAL PROCESS

- The medical provider may be called as a witness in a criminal or other proceeding, and should be prepared to testify in an objective and unbiased manner regarding the medical history, exam, and report
- The provider must honor all subpoenas and other legal obligations
- The provider should contact the person who has sent the subpoena prior to testifying

REGISTRATION AND BILLING

Complete registration in a private setting

- The patient should be informed of CVC coverage and limitations to coverage
- The initial medical forensic exam for sexual assault for the purpose of gathering evidence for possible prosecution must be billed only to Washington State Crime Victim's Compensation [2]
- A Crime Victims Compensation application does not need to be completed for this coverage to be in effect [3]
- Treatment, including antibiotics and emergency contraception, is not automatically covered by Crime Victims Compensation
- Assessment and treatment of injury (e.g., broken arm during the assault) is billed to the patient or their insurance
- If patient applies to Crime Victims Comp and claim is approved, CVC becomes the payer of last resort

CVC application should be given to patient, staff should assist with completing form

---

[1] RCW 70.125.060
[2] RCW 7.68.170
[3] WAC 296-30-170

II. Consent for Care, Mandatory Reporting, and Confidentiality

CONSENT FOR CARE - ADULTS

- The forensic exam is not a medical emergency
- The patient should provide informed consent for the collection of evidence, that is, understand the consequences of consent and of refusal of forensic evidence collection
- The patient should be informed specifically about urine or blood specimen collection which will test for drugs which the patient has been given or has taken

REFUSAL OF CARE

The patient may choose to refuse all or part of the examination and evidence collection

- For example, he or she may consent to the physical exam but not forensic collection, or may decline hair plucking while consenting to other exam procedures
- The patient should be informed of the consequences of declining evidence collection procedures, specifically that this may impede criminal prosecution

WHEN THE PATIENT IS NOT ABLE TO CONSENT

If the patient is not capable of informed consent due to a transitory condition (e.g. intoxication)

- The sexual assault exam should be delayed until the patient is capable of consent. This judgment should be made by the health care provider
- If the patient is not capable of informed consent due to longer-term medical condition, or if evidence will be lost (e.g., patient going in for surgery)
- The health care provider determines whether in his/her opinion evidence collection is in the patient's best interest
- With this assessment, it is legally permissible to collect forensic evidence, including clothing, hair, swabs from skin and orifices
- The evidence should be stored until appropriate consent from patient or legally authorized surrogate decision-maker is obtained.
- Evidence kit and dry clothing may be stored in a locked cabinet at room temperature.

CONSENT FOR CARE – MINORS

In general, the parent or legal guardian must sign consent for care for patients under 18 years of age

THERE ARE SPECIAL EXCEPTIONS FOR REPRODUCTIVE HEALTH CARE, and these exceptions apply in part to medical care after sexual assault

- A female may obtain confidential care for pregnancy or birth control regardless of age [4]
- A person age 14 or older may obtain confidential care for sexually transmitted diseases [5]
- The patient must be able to give informed consent, that is, understand the risks and benefits of the medical treatment and treatment alternatives

---

[4] RCW 9.02 and State v. Koome 84 Wn.2d901 See Appendix, Consent and confidentiality for minors
[5] RCW 70.24.110

Other exceptions to the requirement for parental consent may also apply [6]

- A minor may be legally emancipated by court decree. In this case the minor has the same rights as an adult regarding consent for medical care
- A minor may be emancipated for the purposes of specific medical care, without court decree. This decision may be made by the health care provider [7]
- This decision should be based on the consideration of the following factors: patient's maturity and decision making capacity, independence from parents in residence and financial support

If a minor signs for her own care, document patient's maturity, independence, decision making capacity, understanding of treatment, and plans for safety

- Mandatory reporting still applies, even when the minor has signed for care

MANDATORY REPORTING

- Health care workers, law enforcement personnel, and other mandated reporters must report within 48 hours when they have reasonable cause to believe that a child (person under 18 years of age) has suffered sexual abuse or sexual exploitation[8]
- Sexual abuse includes consensual sexual contact when there is a significant age difference

Age of victim	Age of offender
– Less than 12	– 24 months or more months older
– 12 or 13 years	– 36 months or more older
– 14 or 15 years	– 48 months or more older

- A report of suspected child abuse or neglect must be made to Child Protective Services or law enforcement.
- See http://www1.dshs.wa.gov/ca/safety/abuseReport.asp or call 1-866-363-4276.
- Upon receiving a report, DSHS or law enforcement shall have access to all relevant records of the child in the possession of mandated reporters and their employees.[8]

[6] See Appendix, Consent and Confidentiality for minors (see p.29), Mature minor rule.
[7] Smith v. Seibly 72 Wn2d 16, (1967).
[8] RCW 26.44.030

REQUESTS FOR ANALYSIS - TOXICOLOGY

A DEATH INVESTIGATION

B DRUG FACILITATED SEXUAL ASSAULT

C DRIVING UNDER THE INFLUENCE/DRE

D L.C.B./DRUG INVESTIGATION

- ~~Each card will be packaged and sealed in individual clear plastic bags. Then, package and seal each bag in individual decontaminated clear plastic evidence bags.~~

- ~~All controlled substances must be removed from its container prior to submission for latent print processing. If the narcotics cannot be removed, the agency must wait in person while the processing is being completed.~~

Adhesive Tape

- A combination of powder and chemical applications is used to develop latent prints on the adhesive and non-adhesive side of tape.

- Attention must be given to perform trace evidence collection prior to latent print processing. Special care must be taken not to contaminate or lose any small particles of evidence.

- If possible, place the tape lightly onto a sheet protector or a sheet of heavy plastic. Avoid "wadding" the tape and packaging in paper containers.

Any questions regarding the proper collecting, handling, and packaging of items for latent print examination should be directed to the following:

Latent Prints Laboratory
3310 Capitol Blvd
Olympia WA 98501
Telephone No.: (360) 705-5988

Digital Imaging Photography

For camera resolution and computer hardware/software information, please call the laboratory at (360) 705-5988.

CONFIDENTIALITY FOR MINORS

The patient should be clearly informed of the limitations of confidentiality and the requirements for CPS or police reporting

- Medical provider or advocate should emphasize that privacy is not assured after a police report is made
- Medical provider or advocates should talk with the patient, discuss how to tell parents or guardian of the event and offer to assist patient with this communication

VULNERABLE ADULTS-MANDATORY REPORTING

When there is suspicion of sexual abuse or assault of a vulnerable adult, a report must be made immediately to law enforcement and to the appropriate agency [9]

- A "vulnerable adult" is any person, sixty years of age or older [10]
  - Who has the functional, mental, or physical inability to care for himself or herself
  - An adult living in a nursing home, boarding home, or adult family home
  - An adult of any age with a developmental disability
  - An adult with a legal guardian
  - Or an adult receiving care services in his or her own family's home
- For residents of long-term care facilities, including nursing homes, boarding homes, or adult family homes
  - A report must be made to the law enforcement **and** the Department of Social and Health Services Complaint Resolution Unit (1-800-562-6078)
- For vulnerable adults who reside in their own or family home
  - A report must be made to law enforcement and to Adult Protective Services
  - For specific county contacts, call the statewide intake number (1-866-363-4276) http://www.aasa.dshs.wa.gov/Programs/aps.htm

DIAGNOSIS

- "Rape" is a legal term, not a medical diagnosis
- Assessment throughout the chart should be "Report of sexual assault", or "Concern of sexual assault"

AUTHORIZATION FOR RELEASE OF CONFIDENTIAL HEALTH INFORMATION

Information, medical records, photographs obtained by medical personnel, and evidence including clothing and forensic evidence are protected health information and are subject to HIPAA regulations

- Records and evidence cannot be transferred to law enforcement until authorization for release is obtained (exceptions for minors and vulnerable adults). This authorization may be by:
  - The patient
  - Legally authorized surrogate decision maker
  - Court order or warrant
- Even if the patient is brought in by law enforcement, consent from patient or legally authorized surrogate decision maker must be obtained before releasing information to law enforcement
- Without this consent, only the following information can be released:
  - Name, age address, age, gender, and type of injury of the patient

---

[9] RCW 74.34.035
[11] RCW 74.34.020

- To disclose further information, another exception must apply
  - Exceptions are: children under age 18, vulnerable adults, or to minimize an imminent and serious threat to health or safety[11]
- If there are concerns about authorization for release, hospital risk management and legal counsel should be involved

DOCUMENTATION

- Medical chart is likely to be legal evidence
- It is important to indicate the source of information as documented in chart
- On each page of the report
  - Clearly indicate patient name and hospital number
  - Print name of staff member who completed the page
  - Sign and date

[11] Hospital and law enforcement guide to disclosure of protected health information 2005 Washington State Hospital Assn.

III. Triage, History and Initial Evaluation

TRIAGE

Medical stabilization always precedes forensic examination

- The following history or conditions should be evaluated medically prior to the sexual assault exam
  - History of loss of consciousness
  - Altered consciousness or mental status
  - Head injury
  - Significant facial injury
  - Possible fractures
  - Blunt injury to abdomen or back
  - Active bleeding
  - Pregnancy
  - Psychiatric illness
- If apparent psychiatric illness complicates assessment of report of sexual assault, both psychiatric assessment and medical forensic exam often will be necessary. Proceed according to patient needs and tolerance

INITIAL INFORMATION

DOCUMENT

- Person who accompanied patient and relationship to patient
- Police report if filed: police department and case number
- Time since assault
- Current symptoms: pain, bleeding, respiratory distress, anxiety

HISTORY OF ASSAULT

Obtain information in order to provide appropriate medical care and evidence collection

- Provide privacy for initial interview
- Document source of information (patient, police, or accompanying person)
- Time and place of assault
- Hours since assault
- Number of assailants and sexual assailants, relationship to victim (this is relevant to issue of continued risk)
- Brief narrative history of assault

Note: The medical history is not a forensic interview. It is not necessary for the medical provider to obtain forensic details such as description of the assailant, exact location of the assault, etc. This information should be obtained by police investigators

Nature of force used

- If patient had impaired consciousness due to sleep, substances, or mental status
- Known drug or alcohol ingestion
- Suspected surreptitious drug administration
- Verbal threats
- Perceived life threat
- Use of physical force: restrained, hit, thrown, kicked, pushed, attempted strangulation (choked)

Physical facts of sexual assault

- Areas of body contacted
- Which orifices assaulted
- By what (finger, penis, mouth, foreign object)
- If condom was used

- Physical injuries
- Sites where assailant's saliva or semen may be on victim
- If ejaculation was noted, and where

Post assault activity – if patient

- Showered, bathed
- Douched, rinsed mouth, urinated, or defecated
- Changed clothes, gave clothes to police at scene, or brought clothes worn at time of assault to medical exam

STRANGULATION

If history of attempted strangulation (choking) is obtained specifically ask if patient experienced:

- Light-headedness, fainting or blackout
- Neck pain, neck swelling
- Difficulty breathing, trouble swallowing, voice change, sore throat
- Nausea or vomiting
- Loss of control of bowels or urine
- Vision change
- Weakness or numbness of arms or legs

RISK FACTORS

Regarding Hepatitis B, syphilis, and HIV, if known

- Assailant known or suspected to be HIV positive
- Assailant is a man who has had sex with men

PAST MEDICAL HISTORY AND REVIEW OF SYSTEMS

- Review of systems, with attention to trauma related symptoms
- Active medical problems
- Current medications
- Recent ingestion of other drugs, including over-the-counter drugs, legal and illegal substances, and alcohol
- Ob-gyn history
- Use of contraception
- Last menstrual period
- Time since last consensual intercourse – if within 10 days, specify number of days ago, <u>or</u> no prior intercourse ever
- History of hepatitis B vaccine or illness
- Last tetanus immunization
- Allergies to medications

DISCUSSION WITH PATIENT

Offer clear explanations for all medical and forensic procedures

- Clarify that it is the patient's right to decline any aspect of the exam or evidence collection
- Discuss reporting to law enforcement
- For minors, discuss mandatory CPS or police report
- For vulnerable adults, discuss mandatory law enforcement and DSHS or APS report
- Discuss community resources for support and further care

IV. Medical Examination

General Information

It is the patient's right to consent or refuse any aspect of the exam and evidence collection

- By law, the patient may have a support person (relative, friend, or advocate) present during the exam
- Offer clear explanations or the reasons for each procedure, offer patient some control over the exam process
- It is preferable that the patient does not eat or drink before the exam, but the patient's comfort should not be compromised to achieve this
  - Oral swabs, for example, should be obtained immediately if patient is thirsty or wishes to rinse mouth
  - Urine specimen may be collected before initiating the exam

Exam Procedures

Each patient should have a complete head to toe exam, with attention to signs of trauma

- Because a patient may not recall or may be embarrassed to report all aspects of the assault, the exam should be complete, and evidence collection from all orifices (mouth, vagina, rectum) is routine

Skin

- Document abrasions, bruises, lacerations, bite marks and suction ecchymoses (hickeys)
- Document each injury, specify color and size
- Ask patient if each injury occurred during the assault, or at another time, and document
- Photograph each injury which patient reports was from assault
- Wood's lamp is not sensitive or specific for semen. If used, the examiner and law enforcement should be aware of limitations of this technique
- Indicate on kit envelope if semen or saliva is suspected at each site (this assists crime lab personnel to determine initial tests to perform)

Head

- Palpate scalp for tenderness or swelling
- Examine ears for bleeding or bruising on or behind pinna

Eyes

- Examine eyes for scleral hemorrhage, inner eyelids and conjunctiva for petechiae which may be a sign of strangulation

Oral exam

- Examine soft and hard palate, inner lips and tongue for bruising or lacerations
- Note broken or loose teeth

Neck

- Note hoarseness of voice (a possible sign of strangulation injury)
- Examine anterior, lateral, and posterior aspects for bruises, abrasions, tenderness, and limitation of motion

Chest

- Palpate for tenderness, pain, swelling
- Ausultate for air entry

Abdomen

- Palpate for tenderness, masses

Extremities

- Note bruises, abrasions, lacerations
- Examine for foreign material on hands and fingers
- Palpate for tenderness, examine for pain, limitation of motion

GENITAL EXAM – FEMALE

- Examine in dorsal lithotomy position.
  - Modify for patients with movement limitation
- Examine inner thighs, labia majora, perineum
- Using labial separation and then labial traction, examine labia majora, labia minora, introitus, posterior fourchette, fossa navicularis, urethra, hymen
- Document bruises, abrasions, lacerations, tenderness

Speculum

- Examination of cervix and vagina is not always necessary, since trauma to these structures is uncommon.

Speculum exam is recommended in specific circumstances

- If patient reports bleeding, or bleeding noted on exam and source is not obvious, speculum exam should be performed to distinguish menses from vaginal laceration
- If assault was more than 24 hours prior, chance of recovery of foreign cells is higher if swabs are obtained from the endocervix as well as posterior vaginal pool
- Lubricant (e.g. Surgilube) is generally not necessary for speculum use, but will not interfere with forensic tests.
  - Rinse speculum in warm water for patient comfort
- If lubricant is used place a small amount on a clean swab, dry and label package with evidence and label "control swab **or** place opened lubricant container in kit for lab chemical analysis

NOTE: This exam should not be painful, and the examiner's skill is a factor. For some patients – elderly, virginal teens or adults, adolescents with no prior pelvic exam, uncooperative patients and those who are very apprehensive, the speculum exam is more likely to be uncomfortable. In these cases vaginal forensic swabs may be collected by blind swab techniques (insert 1 swab at a time to posterior vaginal pool, repeat for a total of 4 swabs)

Toluidine blue

- Toluidine blue dye may be used to delineate small areas of abrasion on non-mucosal skin.
- Use only after perineal/vulvar and anal swabs, and before speculum exam

Apply toluidine blue 1% with cotton swab, wipe off dye with water, petroleum jelly, or dilute solution (2.5%) acetic acid. Abrasions will be stained blue

Bimanual Exam

- Bimanual palpation is indicated for specific medical concerns

GENITAL EXAM - MALE

Document abrasions, bruises, lacerations, erythema, and inflammation

- Examine inner thighs, all sides of penile shaft, corona, foreskin, glans penis, scrotum, and perineum

ANAL EXAM MALE AND FEMALE

- Document perianal abrasions, lacerations, bruising, anal laxity
- For women, exam may be done in dorsal lithotomy position.
- For men, examine in supine or prone knee-chest or bending over exam table
- Separate anal folds to visualize lacerations
- Digital exam is not indicated, except if concern for foreign body retention

Anoscopy

- Anoscopy is indicated if there is anal bleeding by history or exam.
- A clear plastic anoscope provides an adequate view of anal mucosa
- Lubricant should be used
- Perform anoscopy after forensic swab collection

V. Pregnancy, STD and Toxicology Testing

PREGNANCY TEST

- Obtain urine or serum pregnancy test on all females ages 10 years (or Tanner stage 3) to 55, except if history of hysterectomy or tubal ligation

STD TESTS

Not generally useful for forensic purposes; positive tests usually indicate pre-existing infection

- Patient assent for these tests should be obtained. Inform patient that these tests are related to health issues, and not forensic tests
- Non-culture nuclear amplification tests for gonorrhea and chlamydia are acceptable in most cases
- Conventional culture tests for gonorrhea and chlamydia are necessary for testing of pharynx or rectum
- Vulnerable adults and young adolescents are an exception: in these cases, if there has been no prior consensual activity STD tests may be legally important.
- A positive non-culture test should be verified by another method before treatment
- RPR (syphilis) test is not routinely recommended, but may be done in follow-up

HIV TESTING

- Baseline HIV testing may be performed up to 2 weeks after assault, and may be performed at follow-up visit
- If HIV prophylaxis will be given, baseline HIV serology is mandatory
- Patient must exhibit understanding that the acute test will not reflect acquisition of HIV from the assault, but relates to possible exposure 2 months or more prior

Arrangements must be made to inform patient of results

VAGINAL WET MOUNT

- Not recommended to examine for sperm, due to lack of reproducibility
- May be used to assess vaginitis if signs or symptoms are present
- Use standard methods for diagnosis

TOXICOLOGY TESTS

Obtain when

- Patient appears impaired, intoxicated, or has altered mental status **or**
- Patient reports blackout, memory lapse, or partial or total amnesia for event **or**
- Patient is concerned that he or she may have been drugged

Hospital toxicology

- If toxicology results are needed for patient care, order stat hospital toxicology
- This may be by bedside or lab immunochemical method

Forensic toxicology

- Tests for legal evidence should be performed at the Washington State Toxicology Lab (see Evidence Collection and Storage, below)
- If urine was collected at home, this specimen may be processed as evidence
  - Clearly label with site of collection and transport method
  - Another specimen obtained at the hospital should also be processed as forensic evidence for toxicology
- Write the time from suspected ingestion on the specimen label and requisition

Alcohol level

- If needed for patient care, obtain blood alcohol level
- Urine alcohol levels are not acceptable as forensic tests
- If concern of drug-facilitated assault ("date rape drug"), alcohol level obtained within 8 hours of amnesia may provide valuable information

VI. Evidence Collection Principles

GENERAL PRINCIPLES

Kit

- Use of a manufactured "Evidence kit" is not mandatory.
- If a commercial kit is used, it should contain the necessary components to collect the evidence in the guidelines.
- TriTech USA produces a kit which conforms to the requirements of the Washington State Crime Lab, and is in compliance with these Guidelines. (Tel: 1-800-438-7884 Washington State Kit)

Patient comfort

- Patient comfort should not be compromised for evidence collection
  - For example, if patient is thirsty, collect oral swabs immediately and then provide something to drink
  - If patient needs to urinate, provide specimen container immediately
- The patient may decline any aspect of evidence collection
  - For example, the patient may assent to head hair combing and decline pubic hair pulling, or assent to examination and decline photography

Technique

- Evidence should be routinely collected from all sites
  - For example, oral and rectal swabs should be collected even if the patient reports only vaginal penetration
- It is helpful to affix labels to the drying rack to indicate site of swabs
- Use cotton swabs only
- Use powder free gloves, and change frequently during exam to minimize cross-contamination
- For skin swabs, use "wet-dry" swab technique as this increases recovery of foreign DNA
  - Moisten 1 swab with 1 drop of water and lightly swab area
  - Repeat with dry swab
  - Water for moistening swabs may be supplied in kit, or from sterile hospital supply
- For orifice swabs, use 4 swabs for each orifice
- Write on envelope any variations or modifications used in obtaining evidence

VII. Evidence Collection Steps

SITE	PATIENT SELECTION RATIONALE	TECHNIQUE
Forensic toxicology	If patient reports blackout or concern of drug facilitated sexual assault	For medical care, obtain stat blood alcohol and urine toxicology screen For forensics: if < 24 hours, 2 grey top blood tubes + 30 ml urine if >24 hours, 20 ml. urine only ▪ Collect urine in standard specimen cup, then transfer urine to state toxicology leakproof plastic cup or 2 red top tubes. Place in biohazard bag ▪ Maintain at room temperature refrigerate or freeze until transfer. ▪ Do NOT freeze glass tubes. *Do NOT package in kit. Transfer separately to law enforcement*
Oral swabs	All Even if ate/drank/rinsed mouth after assault	Use 4 cotton swabs total. Do not moisten ▪ Using 1swab at a time, swab around gingival border, at margins of teeth, buccal and lingual surfaces ▪ Repeat with remaining 3 swabs
Trace debris	If abuse occurred out of home or outdoors, and patient has not changed clothes	Place clean bed sheet (or paper sheet) on floor ▪ Place clean paper sheet (at least 2' x 2 ') on top ▪ Have patient undress while standing on paper ▪ Fold paper to retain debris ▪ Place in envelope, seal, sign and date over tape
Outer clothing	If wearing (or brought in) clothing worn at time of assault If event occurred out of doors or clothing was stained or damaged collection is particularly important	Place each item of clothing in a separate paper grocery-type bag ▪ Place patient label on each bag ▪ Write contents on outside of each bag, e.g. "jeans" ▪ Tape each bag closed with clear packing tape, and sign over tape ▪ Place smaller clothing bags in one large paper grocery bag ▪ Tape this bag closed with clear packing tape. Label with patient ID, and with permanent marker sign and date over tape ▪ Maintain chain of evidence. Lock in secured area when not directly observed *Do not cut through any existing holes, rips, or stains. Do not shake out patient's clothing or trace evidence may be lost.* *Wet items – place in double paper bag, place in open plastic container or in open plastic bag.* *Label "WET" and transfer to law enforcement within 3 hrs*
Underpants	All, even if changed after event (exception: if police have collected at scene)	Package in a small paper bag ▪ Seal, label, and place in the Evidence Kit *Note: Do not attempt to dry wet underpants or adult diapers.. Either transfer to law enforcement within 3 hours, or place in double paper bag, seal, place in open plastic container (basin) or open plastic bag. Label "WET" and refrigerate or freeze until transfer*
Reference hair	All May be needed to compare with hair pulled out at scene	Pluck 10 hairs from scalp ▪ Place on clean paper (alt., place on sticky side of clean Post-it note) ▪ Fold in paper and place in envelope
Fingertip swabs	All	Use 4 swabs total - 2 swabs for each hand ▪ With 1 moistened swab, swab all 5 fingertips one hand, concentrating on area under nails ▪ Repeat with 1 dry swab on same hand ▪ Repeat process on other hand

Reference blood	To obtain patient's DNA	Use lancet from kit, or small needle and syringe ▪ May obtain at the same time in same syringe as other labs ▪ Place on designated filter (FTA) paper, fill each circle completely before moving to next circle, fill all 4 circles
Debris on skin	If debris visible and expecially when alleged assault was out of home (e.g., threads, dirt)	Use 1 swab, moisten with 1 drop water ▪ Lift off debris, place in clean paper ▪ Fold and place in envelope ▪ Write on envelope site of collection
Skin swabs	All Ask patient if any areas of possible semen or saliva deposition. Swab these areas, as well visible bite marks or suction bruises, or dried secretions on skin. Obtain even if patient bathed after event, since bathing may be incomplete	Swab all suspect areas, as well as visible bite marks or suction bruises, and dried secretions on skin. ▪ Use 2 swabs total for each site ▪ Moisten 1 swab with 1 drop of water ▪ Swab area of suspected foreign secretions ▪ Repeat with second, dry swab ▪ Repeat 2 swab wet/dry technique for each suspect area ▪ Indicate on envelope if saliva or semen is suspected by patient report
Pubic hair combing	Omit if shaved or absent pubic hair	▪ With patient in dorsal lithotomy, place clean paper under buttocks ▪ Using supplied comb, comb downward to collect loose hairs ▪ Fold paper to retain hairs, and place in envelope
Pubic hair plucking	Omit if shaved or absent pubic hair To compare with foreign hair	Pull 5 – 10 hairs from different areas of pubis ▪ Place on clean paper (alt., place on sticky side of clean Post-it note) ▪ Fold in paper and place in envelope ▪ If patient declines, may obtain at a later date
Vulvar/ perineal swabs	All females	Use 4 cotton swabs total ▪ Moisten 2 swabs with 1 drop of water on each ▪ Swab external genital folds and perineum ▪ Repeat with 2 dry swabs
Vaginal/ endocervical swabs	All females	Use 4 cotton swabs total ▪ Use 2 swabs for vaginal pool specimens ▪ Insert vaginal speculum ▪ Using one swab at a time, insert in posterior direction approx 4", and swab posterior vaginal pool ▪ Repeat with second swab ▪ Use 2 swabs for endocervical specimens ▪ Using one swab at a time, swab posterior fornix/vaginal pool ▪ Repeat with second swab *Note: for young patients, for elderly patients, or any patient for whom speculum use is very uncomfortable, can all obtain 4 swabs from the posterior vaginal pool.*

Male genital swabs	All males	Penile swabs ▪ Use 4 cotton swabs. Moisten 2 with 1 drop of water on each ▪ Swab penis: anterior, lateral, posterior and glans penis and under foreskin with moistened swabs ▪ Repeat with 2 dry swabs ▪ After drying , package in "vaginal endocervical" envelope. Write site of collection on envelope Perineal swabs ▪ Use 4 cotton swabs total ▪ Moisten 2 swabs with 1 drop of water on each ▪ Swab perineum and scrotum ▪ Repeat with 2 dry swabs ▪ After drying , package in "Vulvar-perineal" envelope
Anal swabs	All even if anal assault not reported. Patient may not recall or report anal assault. Vaginal fluid may leak into anus.	Perianal: Use 2 swabs total ▪ Moisten 1 swab with 1 drop water ▪ Swab peri-anal folds. Repeat with dry swab Anal: Use 2 swabs total ▪ Moisten each with 1 drop of water ▪ Insert 1 swab 1-2 cm into anus ▪ Repeat with second moistened swab

VIII. Forensic Evidence Processing and Storage

PROCESSING FORENSIC SPECIMENS

- Forensic specimens are not processed within the hospital, but stored separately and transferred to law enforcement
- Evidence may later be tested by the Washington State Patrol Crime Lab
- All evidence is not necessarily processed

CHAIN OF CUSTODY FOR FORENSIC SPECIMENS

One staff member must be responsible for maintaining chain of evidence. That staff member at all times:

- Maintains continuous physical possession of specimens and items of evidence, or
- Designates another staff member to maintain possession of evidence, or
- Locks specimens in closed area (room, cabinet, refrigerator or freezer)

DRYING EVIDENCE

- All evidence must be thoroughly dried before packaging
- If items cannot be dried (e.g., tampons or clothing) package in paper and transfer immediately, or freeze until transfer. Mark the outside of these packages "WET"

Drying swabs

- Maintain chain of custody while drying
- Swabs may be locked in room, cabinet or drying box to dry
- Do not use heat to dry swabs
- If drying box is used, place swabs from only one patient at a time in drying box
- Use plastic "Crash cart" lock to close box
- When drying is complete, place used plastic lock into evidence kit to demonstrate chain of custody of evidence
- Clean drying box with 20% bleach or hospital approved disinfectant

Time for drying

- A swab moistened with 3 drops of water will take 1 hour to dry in a standard drying box. Swabs left outside of a box will take a similar time to dry

EVIDENCE STORAGE

Temperature

- Dry or dried evidence may be kept at room temperature or frozen.
- Damp or wet evidence or specimens must be kept at cool temperature (refrigerated or frozen) until transfer OR transfer within 3 hours

Evidence Kit

- All evidence placed in the Evidence Kit must be dry or dried before packaging
- Store sealed Evidence Kit in locked cabinet, refrigerator, or freezer until transfer to law enforcement

Clothing

- Store clothing in locked room or cabinet until transfer to law enforcement
- Wet clothing must either be dried or frozen in a locked area, or transferred within 3 hours to law enforcement

Do not thaw and refreeze

Toxicology Urine and Blood

- Do not place in the Evidence Kit
- Urine for toxicology may be collected in a standard medical specimen cup
- Transfer 20-50 ml into a leak proof container supplied by the State Toxicology lab
- Urine may be left at room temperature, refrigerated, or frozen in plastic until transfer
- Blood tubes for toxicology (grey tops) may be left at room temperature or refrigerated until transfer

Do not freeze as glass tubes may break

LABELING AND PACKAGING SWABS

- Swabs must be labeled with site of collection – this label may be on the swab itself or on the cardboard box for the swab
- Write on a label the site of specimen, e.g., "Skin - right upper leg," "oral," "endocervical," "vulvar," "rectal"
- If using a cardboard box from the manufactured evidence kit
- Place 2 swabs from same site in one box
  - Affix label to cardboard box
- Alternatively, if not using a cardboard box
  - Affix label to wooden shaft of swabs, 1 label to 2 swabs from same site
- Place dried swabs (in cardboard box) in envelope. Place swabs from only 1 site in each envelope (oral, vaginal/endocervical, rectal, skin)
- Place patient label on envelope. Write contents on outside of envelope
- Seal envelopes using tape, adhesive seal, or patient ID label. Never lick envelope to seal.
- Sign over seal, and place in Evidence Kit

FOREIGN OBJECTS

Items which may contain forensic evidence, such as sanitary pads, condom, or tampon

- Place item in plastic biohazard bag or sterile urine cup
- Place patient label over seal, sign over seal
- If item is wet or damp, transfer to law enforcement immediately, or store in locked refrigerator or freezer until transfer
- **DO NOT** place these items inside the Evidence Kit

IX. Medical Photography

If visible injuries are present, photography with digital, 35mm, specialized Polaroid, or video camera assists in documentation

GENERAL

- Each camera type has advantages and limitations.
  - Polaroid photos generally have poor color and preservation
  - Video should have no sound recording unless all parties are aware of and consent [12]
- Careful documentation with drawing is mandatory even when photographs are obtained
- Each institution should take appropriate steps to maintain the privacy and dignity of the patient in photos

Always document name of photographer and date of photos

- This may be done by documentation in the chart, in a photo log, or by writing the photographer name and date on the patient identification label which is then photographed

TECHNIQUE

- Staff must be trained in specific camera and photography techniques
- If date function is used, verify that date is correct
- Check flash function: photos may be better either with or without flash
- First photo is of patient identification label
- One photo should include patient face

Photograph each injury site 3 times

- First, from at least 3 feet away, to demonstrate the injury in context
- Second, close up
- Third, close up with a measuring device (ruler, coin, or ABFO rule)

BODY PHOTOS

Photos of body injury are as significant as genital injury in sexual assault cases

- Drape patient appropriately, photos may be shown in open court
- Hospital personnel may either take the photos or assist law enforcement in obtaining photos

BITE MARKS

- Bite marks should be photographed, but police should be notified for police photographer to obtain technically optimal photos
- Use of a measuring device and good technique (camera perpendicular to plane of skin) is particularly important

COLPOSCOPY

- Magnified photos of the genital or anal area can document injury
- Use photo or video colposcope, or camera with macro function
- Measuring device is not needed in these photos
- If blood or debris is present, photograph first, then clean area and photograph again
- If toluidine blue is used, photograph before and after dye application (see page 11)

---

[12] RCW 9.73.030

PHOTO STORAGE AND RELEASE

- Photos are part of the medical record
- Photos may be stored outside of the medical records department (just as x-ray films are stored in the radiology department)

Provide formal tracking of copies, release dates, and person responsible for releasing and receiving photos.

- Follow HIPPA compliance policies for release of all records including photos
- Photos may be released to law enforcement with proper consents
- Follow medical records retention rules regarding disposal of photographs
- Because of the extremely confidential nature of colposcopy photos, these photos are not released like other portions of the medical record

Colposcopy photos are released only in response to a subpoena and then are released directly to the medical expert who will review the photos

X. Treatment and Discharge

EMERGENCY CONTRACEPTION

By Washington State law every hospital providing emergency care for sexual assault victims must [13]

- Provide information about emergency contraception
- Inform each victim of her option to be provided with this medication, and
- If not medically contraindicated provide emergency contraception immediately

Offer emergency contraception when

- Assault occurred within prior 3 days and
- Patient is at risk for pregnancy and
- Patient is not using a highly reliable method of contraception such e.g., oral contraception (no pills missed in cycle) Depo-provera, IUD, tubal ligation, contraceptive patch and
- Patient feels any pregnancy conceived in the last five days would be undesirable to continue and
- Pregnancy test is negative

Note: Emergency contraception reduce chances of pregnancy when taken up to 5 days of unprotected intercourse

See Post Assault Medications, page 24

STD PROPHYLAXIS

Offer antibiotic prophylaxis for gonorrhea and chlamydia when:

- Patient is concerned about the possibility of contracting an STD or
- Alleged assailant is known to have an STD or high risk behavior or
- Patient reports multiple assailants or
- Patient desires treatment
- For a patient who reports no prior sexual activity, or a vulnerable adult, decide on a case by case basis whether treatment benefit outweighs the risk of obscuring legal evidence of STD infection

See Post Assault Medications, page 24

HEPATITIS B VACCINE

- Hepatitis B immunization is effective prophylaxis if given up to 14 days after contact

Offer when:

- Patient has not been previously fully immunized for Hepatitis B, and
- Patient has negative history for Hepatitis B, and
- Secretion mucosal contact occurred during assault, and
- Inform patient that repeat vaccine doses are necessary at one month and 4 months after initial vaccine
- If past immunization history unavailable, may offer vaccine, or inform patient of effectiveness and availability of vaccine if given within next 14 days
- Refer for completion of vaccine series

TETANUS PROPHYLAXIS

Offer when:

- Open skin wounds occurred during assault and
- Patient not up to date for tetanus immunization (no immunization in past five years)
- Refer for completion of vaccine series

[13] RCW 70.41.350

HIV POST-EXPOSURE PROPHYLAXIS (PEP)

- The risk of contracting HIV from a single sexual contact with an infected person is low (less than 1%)
- It is frequently impossible to know or learn the HIV status of the assailant
- Higher risk circumstances are:
  - Assailant is known to be HIV positive
  - Victim and assailant both male
  - Anal assault
  - In these cases, consult medical specialists to discuss risks and options
- Post-exposure prophylaxis is a 28 day course of treatment.
- The cost of medication ($1000+) may not be covered by Crime Victim's Compensation
- HIV PEP should be started as soon as possible when indicated
- See CDC 2005 "Anti-retroviral Post Exposure Prophylaxis after Sexual, Injection Drug Use, or other Non-occupational exposure"[14]

DISCHARGE

- Explain to patient what tests were obtained
- Explain follow up for medical test results, if done
- Explain that if police report was made, detective will contact patient within several days
- Assess support systems, refer for supportive care
- Offer patient education materials
- Give written discharge instructions
- Confirm plans for follow-up

[14] CDC 2005 Antiretroviral Prophylaxis After Non-occupational Exposure. See Appendix.

XI. Follow Up Medical Care

TIMING

Recommended within two weeks of the initial exam

- Follow-up may be by telephone or in-person
- Earlier medical follow-up may be needed if significant physical injury or other health issues

BILLING

- Crime Victim's Compensation (CVC) does not routinely cover the follow up visit
- Application to CVC may be made, and if approved, CVC may be the secondary insurer

REVIEW WITH PATIENT

- Acute exam findings
- Medical lab results, if any (crime lab results will not be available)
- Current physical symptoms
- Emotional reactions (sleep disorders, anxiety, depressive symptoms, flashbacks)
- Concerns for safety and legal issues
- Concerns regarding STDs and HIV
- Assess social support (family, friends)

MEDICAL EXAM

Depending on history and symptoms

- Check for resolution of injury
- Evaluate any new symptoms
- Refer for medical care, if needed

LABORATORY TESTS

Depending on risk and patient concerns

- Obtain urine pregnancy test
- Test for gonorrhea and chlamydia at exam if single dose prophylaxis was <u>not</u> given
- Saline wet mount and KOH prep to evaluate vaginitis symptoms
- HIV: pre-test and post-test counseling required after exposure
  - Baseline, 6 weeks, 12 weeks, and 24 weeks after exposure
- Hepatitis B serology if particular concerns
- Syphilis serology if particular concerns

TREATMENT

Hepatitis B vaccine

- Prophylaxis with vaccine may be initiated up to 14 days post assault
- Indicated if there has been secretion to mucosal contact, and if patient has not been fully immunized
- Initiate, continue or refer for completion of series (initial, one month, 4 months after first dose)
- Assess and treat other medical conditions, as needed

REFERRAL

- Refer to medical, advocacy, mental health and social services

XII. Post Assault Medications

RECOMMENDED MEDICATIONS

Cefpodoxime*	400 mg po x 1 for gonorrhea prophylaxis		
Azithromycin	1 gm po for chlamydia prophylaxis		
Hepatitis B Vaccine	1 ml IM	deltoid	If not previously fully immunized
Tetanus toxoid	0.5 ml IM	deltoid	If skin wound and immunization needed

* Alternative: Ceftriaxone 125 mg IM x1

For pregnant patients, consider providing no prophylactic antibiotics. In this case, gonorrhea and chlamydia tests should be obtained at follow-up visit in 2 weeks. If prophylaxis is strongly desired, cefpodoxime and azithromycin are Class B drugs

FOR PENICILLIN ALLERGIC PATIENTS

Late onset, atypical, or undocumented allergy: use above regimen
If history of analphylaxis or immediate hives:

Oflaxacin	400 mg po x1
OR	
Ciprofloxacin	500 mg po x1
PLUS	
Azithromycin	1 gm po x1

EMERGENCY CONTRACEPTION

Confirm negative pregnancy test
Begin medication as soon as possible, within 3 days (72 hours) after assault
Patient should understand that any pregnancy conceived within past 5 days might be at risk

* Large studies indicate effectiveness up to 5 days after assault, this timeframe is used in some centers

Recommended Regimen

Levonorgestrel (Plan B)	1 tab 0.75 mg po	Repeat dose in 12 hours OR take 2 pills at once (anti-nausea medication <u>not</u> required)

XIII. Supplies Needed for Medical / Forensic Exam

HOSPITAL SUPPLIES	SPECIALIZED FORENSIC SUPPLIES
1. Patient gown and drape	Forensic urine container
2. Examiner gloves	11. Measuring ruler
3. Patient ID labels #40	12. Camera (film or digital card)
4. Bedsheet or paper sheet (for floor)	13. Sexual Assault Evidence Kit
5. Urine specimen cup	14. Drying rack for swabs
6. Speculum	15. Swab dryer or identified locked cabinet
7. Anoscope and lubricant	16. Brown paper grocery bags for clothing - Large and medium sizes
8. Red top tubes and venipuncture set	17. Clear packing tape for paper bags
9. Gauze sponges	18. Indelible marker for labeling
10. Optional: culture tubes, toxicology bedside screen	19. Change of clothing
	20. Optional: Toluidine blue

XIV. Sample Exam Process

INITIAL

1. Triage and registration, consent for care
2. Inform patient
   - CVC coverage and limitations, exam process, right to decline any part of exam
   - Availability of emergency contraception
   - Obtain authorization for release of medical records and evidence to police (choice by patient)

HISTORY

1. Elicit patient concerns
2. Obtain history of event
   - Document statements. Document demeanor. Assess speech, cognition, mental status
3. Develop discharge and safety plan with patient

MEDICAL EXAM, PHOTOS AND EVIDENCE COLLECTION

1. Vital signs
2. Collect urine sample
3. Pregnancy test
4. Hospital toxicology/ETOH test if needed
5. Transfer 30 ml to forensic urine container
   - if State Tox lab testing indicated
6. Document physical appearance
7. Open evidence kit
8. Place label on outside of kit
9. Collect oral swabs (can then offer water)
10. Have patient undress over paper
    - Collect trace evidence
11. Package clothing
    - Collect outer clothing if worn at assault.
    - Use separate bag for each item
      Package underpants
    - Collect even if changed after assault.
    - Package in envelope in Evidence Kit
      Examine head/scalp/neck
12. Pluck head hairs
    - 10 hairs from different areas of scalp
      Examine extremities
16. Collect fingertip swabs
17. Obtain reference blood on filter paper
18. Examine skin, chest, abdomen, back
19. Auscultate heart, chest, palpate abdomen
20. If injuries visible, prepare photography
    - Photograph patient label
21. Photograph facial, neck, trunk extremity injury
22. Collect debris (fibers, grass, etc) found on skin
23. Skin swabs
    - - Swab areas of possible saliva or semen
24. Pubic hair combing
25. Pubic hair plucking
    - Pull 5 –10 hairs from different areas of pubis
26. External genital exam
27. Obtain vulvar- perineal swabs
28. Photograph external genital injury
29. Toluidine blue (optional) – repeat photography
30. Insert speculum (optional)
31. Vaginal swabs +/- endocervical swabs
32. Inspect perineal and anal area
33. Photograph anal injury
34. Perianal swabs and anal swabs

CLOSURE

1. Discuss findings with patient
2. Discuss next steps with patient
3. Provide medications
4. Provide written discharge and follow up information

COMPLETE DOCUMENTATION, DRYING AND PACKAGING EVIDENCE, AND COMPLETE WRITTEN REPORT

XV. Washington State Community Sexual Assault Programs (www.wcsap.org)

Aberdeen
Beyond Survival
PO Box 203
Aberdeen, WA 98520
(360) 533-9751
Hotline: (360) 535-9751
angelan@coastalcap.org

Bellevue
Harborview Children's Response Center
1120 112th Ave NE #130
Bellevue, WA 98004
(425) 688-5130
Hotline: (425) 688-5130
ddoane@u.washington.edu
www.childrensresponsecenter.org

Bellingham
DV/SA of Whatcom County
1407 Commercial Street
Bellingham, WA 98225
(360) 671-5714
Hotline: (877) 715-1563
wcservice@qwest.net
www.dvsas.org

Bingen
Klickitat Skamania Development Council - Programs for Peaceful Living
1250 E Steuben St
Bingen, WA 98672
(509) 493-1533
Hotline: (800) 866-9373
lisapfpl@gorge.net

Cathlamet
St. James Family Center
PO Box 642
Cathlamet, WA 98612
(360) 795-6401
Hotline: (866) 795-9381
hansenb@centurytel.net
www.stjamesfamilycenter.org

Chehalis
Human Response Network
PO Box 337
Chehalis, WA 98532
(360) 748-6601
Hotline: (800) 244-7414
hrnet@localaccess.com

Clarkston
Rogers Counseling Center
900 7th Street
Clarkston, WA 99403
(509) 758-3341
Hotline: (800)932-0932
gprice@rogerscounseling.org
www.rogerscounseling.org

Colville
Rural Resources Community Action – Family Support Center
956 South Main Street
Colville, WA 99114
(509) 684-3796
Hotline: (509) 684-6139
nfoll@ruralresources.org
www.ruralresources.org

Coupeville
Citizens Against Domestic & Sexual Abuse
PO Box 723
Coupeville, WA 98239
(360) 678-9363
Hotline: (360) 678-3030
margie@cadacanhelp.org
www.cadacanhelp.org

Davenport
Family Resource Center of Lincoln County
PO Box 1130
Davenport, WA 99122
(509) 725-4358
Hotline: (800) 932-0932
famrc@lincolncounty-wa.com

Eastsound
DV/SA Services of the San Juan Islands
PO Box 1516
Eastsound, WA 98245
(360) 376-5979
Hotline: (360) 376-1234
dvsassanjuan@rockisland.com
www.dvsassanjuans.org

Ellensburg
Center Washington Comprehensive Mental Health - (ASPEN)
220 West 4th Avenue
Ellensburg, WA 98926
(509) 925-9384
Hotline: (866) 925-9384
ccathcart@cwcmh.org

Everett
Providence Sexual Assault Center
PO BOX 1067
Everett, WA 98206
(425) 258-7969
Hotline: (425) 252-4800
dusty.olson@providence.org

Forks
Forks Abuse Program
PO Box 1775
Forks, WA 98331
(360) 374-6411
Hotline: (360) 374-2273
sally.s@forksabuse.org
www.forksabuse.org

Kelso
Emergency Support Shelter
PO Box 877
Kelso, WA 98626
(360) 425-1176
Hotline: (360) 636-8471
Jand@cascadnetworks.net

Kennewick
Sexual Assault Response Center
830 N Columbia Ctr Blvd, #H
Kennewick, WA 99336
(509) 374-5391
sarced@verizon.net
www.sexualassaultresponsecenter.com

Moses Lake
New Hope DV/SA Services
PO Box 1744
Moses Lake, WA 98837
(509)764-8402
Hotline: (888) 560-6027
newhope@sliderule.net

Mount Vernon
Skagit DV/ SA Services
PO Box 301
Mt. Vernon, WA 98273
(360) 336-9591
Hotline: (800) 726-6010
pamc@skagitdvsas.org
www.skagitdvsas.org

Newport
Family Crisis Network
PO Box 944
Newport, WA 99156
(509) 447-2274
Hotline: (509) 447-5483
cody@pofcn.org

Olympia
Safeplace Rape Relief and Women's Shelter Services
314 Legion Way SE
Olympia, WA 98501
(360) 786-8754
Hotline: (360) 754-6300
safeplace@safeplaceolympia.org
www.safeplaceolympia.org

Omak
The Support Center
PO Box 3639
Omak, WA 98841
(509) 826-3221
Hotline: (888) 826-3221
supportcenter@ncidata.com

Port Angeles
Healthy Families of Clallam County
111 East 3rd Street, #1-d
Port Angeles, WA 98362
(360) 452-3811
Hotline: (360) 452-4357
healsam2@olypen.com
www.healthyfam.org

Port Orchard
Kitsap Sexual Assault Center
PO Box 1936
Port Orchard, WA 98366
(360) 479-1788
Hotline: (360) 479-8500
ksac@wavecable.com

Port Townsend
DV/ SA Programs of Jefferson County
PO Box 743
Port Townsend, WA 98368
(360) 385-5291
Hotline: (360) 385-5291
dvsa@dvsajeffco.org

Pullman
Alternatives to Violence of the Palouse
PO Box 37
Pullman, WA 99163
(509) 332-0552
Hotline: (509) 332-4357
atvp@turbonet.com
www.atvp.org

Renton
King County Sexual Assault Resource Center
PO Box 300
Renton, WA 98057
(425) 226-5062
Hotline: (888) 998-6423
mstone@kcsarc.org
www.kcsarc.org

Republic
Ferry County Community Services - Connections
42 Klondike Road
Republic, WA 99166
(509) 775-3331
Hotline: (509) 775-3132
dvsa@fccs1.org

Seattle
Abused Deaf Women's Advocacy Services
4738 11th Avenue NE
Seattle, WA 98105
(206) 726-0093 TDD
Hotline: (206) 236-3134 TDD
adwas@adwas.org
www.adwas.org

Seattle
Harborview Center for Sexual Assault & Traumatic Stress
325 9th Avenue, MS 359947
Seattle, WA 98104
(206) 521-1800
Hotline: (206) 521-1800
lmerchan@u.washington.edu
www.hcsats.org

Shelton
Center for Advocacy & Personal Development
PO Box E
Shelton, WA 98584
(360) 426-5430
Hotline: (360) 490-5228
sacapd@hctc.com

Shelton
South Puget Intertribal Planning Agency
2970 SE Old Olympic Hwy
Shelton, WA 98584
(360) 426-3990
Hotline: (360) 490-5713
garrett@spipa.org
www.spipa.org

South Bend
Crisis Support Network
PO Box 48
South Bend, WA 98586
(360)484-7191
Hotline: (800) 435-7276
csn3@centurytel.net

Spokane
Sexual Assault & Family Trauma Response Center
210 West Sprague Avenue
Spokane, WA 99201
(509) 747-8224
Hotline: (509) 624-7273
mcilley@lcsnw.org
www.lcsnw.org/spokane

Stevenson
Skamania County Council on DV/SA
PO Box 477
Stevenson, WA 98648
(509) 427-4210
Hotline: (877) 427-4210
sccdvsa@gorge.net

Sunnyside
Lower Valley Crisis & Support Services
PO Box 93
Sunnyside, WA 98944
(509) 837-6689
Hotline: (509) 837-6689
lvcss@bentonrea.com

Tacoma
Sexual Assault Center of Pierce County
633 North Mildred Street, #J
Tacoma, WA 98406
(253) 597-6424
Hotline: (253) 474-7273
carolee@sexualassaultcenter.com
www.sexualassaultcenter.com

Vancouver
YWCA of Clark County - Sexual Assault Program
3609 Main Street
Vancouver, WA 98663
(360) 696-0167
Hotline: (360) 695-0501
jrenner@ywcaclarkcounty.org
www.ywcaclarkcounty.org

Walla Walla
YWCA of Walla Walla
213 South 1st Street
Walla Walla, WA 99362
(509) 525-2570
Hotline: (509) 529-9922
ywca@bmi.net
www.ywcaww.org

Wenatchee
Domestic & Sexual Violence Crisis Center
PO Box 2704
Wenatchee, WA 98807
(509) 663-7446
(800) 888-6388
dsvcrisis@nwi.net
www.findsafety.org

Yakima
Central WashingtonComprehensiveMental Health - Yakima SAP
PO Box 959
Yakima, WA 98907
(509) 576-4326
Hotline: (888) 605-6999
kfoley@cwcmh.org
www.cwcmh.org

XVI. Key Contacts

Washington State Child Protective Services (CPS)
Statewide reporting line 1-866-363-4276
http://www1.dshs.wa.gov/ca/safety/abuseReport.asp

Washington Adult Protective Services
For report of assault of abuse of vulnerable adult who resides in their own or family home
For specific county phone numbers call 1-866-EndHarm (1-866-363-4276)
http://www.aasa.dshs.wa.gov/Programs/aps.htm

Washington Department of Social and Health Services
For report of suspected abuse or assault of a vulnerable adult who resides in a residential facility
Complaint Resolution Unit (1-800-562-6078)

XVII. References

Centers for Disease Control and Prevention. Sexually Transmitted Diseases Treatment Guidelines 2002. MMWR 2002:51 (No. RR-6) http://www.cdc.gov/std/treatment/default.htm Accessed August 1, 2005.

Center for Disease Control and Prevention. Antiretroviral Postexposure Prophylaxis After Sexual, injection-drug Use, or other nonoccupational exposure to HIV in the United States Recommendations from the U.S. Department of Health and Human Services. MMWR 2005:54(No RR-02)
http://www.cdc.gov/mmwr/preview/mmwrhtml/rr5402a1.htm. Accessed April 13, 2006.

US Department of Justice, Office of Violence against Women. A National Protocol for Sexual Assault Medical Forensic Examinations Adults/Adolescents NCJ 206554 Sept 2004
http://www.ncjrs.org/pdffiles1/ovw/206554.pdf

Hospital and Law Enforcement Guide to Disclosure of Protected Health Information 2005 Washington State Hospital Association. Available at
http://www.wsha.org/Publications/HIPAA_and_LE_Guide_7_05.pdf. April 13, 2006.

XVIII. Washington State Laws

Full text may be found at Washington State Office of the Code Reviser
http://www1.leg.wa.gov/CodeReviser

RCW 7.68.170 EXAMINATION COSTS OF SEXUAL ASSAULT VICTIMS PAID BY STATE.

No costs incurred by a hospital or other emergency medical facility for the examination of the victim of a sexual assault, when such examination is performed for the purposes of gathering evidence for possible prosecution, shall be billed or charged directly or indirectly to the victim of such assault. Such costs shall be paid by the state pursuant to this chapter.

WAC 296-30-170 WHO IS REQUIRED TO PAY FOR SEXUAL ASSAULT EXAMINATIONS?

When a sexual assault examination is performed for the purpose of gathering evidence for possible prosecution, the costs of the examination must be billed to the crime victims compensation program. We are the primary payer of this benefit. The client is not required to file an application with us to receive this benefit and may not be billed for these costs. If the examination includes treatment costs or the client will require follow-up treatment, an application for benefits must be filed with us for these services to be considered for payment.

RCW 26.44.030 CHILD ABUSE MANDATORY REPORTING

(1)(a) When any practitioner, county coroner or medical examiner, law enforcement officer, professional school personnel, registered or licensed nurse, social service counselor, ...has reasonable cause to believe that a child has suffered abuse or neglect, he or she shall report such incident, or cause a report to be made, to the proper law enforcement agency or to the department as provided in RCW 26.44.040...

(d) The report must be made at the first opportunity, but in no case longer than forty-eight hours after there is reasonable cause to believe that the child has suffered abuse or neglect. The report must include the identity of the accused if known...

(4) The department, upon receiving a report of an incident of alleged abuse or neglect pursuant to this chapter, involving a child who has died or has had physical injury or injuries inflicted upon him or her other than by accidental means or who has been subjected to alleged sexual abuse, shall report such incident to the proper law enforcement agency. In emergency cases, where the child's welfare is endangered, the department shall notify the proper law enforcement agency within twenty-four hours after a report is received by the department. In all other cases, the department shall notify the law enforcement agency within seventy-two hours after a report is received by the department. If the department makes an oral report, a written report must also be made to the proper law enforcement agency within five days thereafter...

(10) Upon receiving reports of alleged abuse or neglect, the department or law enforcement agency may interview children. The interviews may be conducted on school premises, at day-care facilities, at the child's home, or at other suitable locations outside of the presence of parents. Parental notification of the interview must occur at the earliest possible point in the investigation that will not jeopardize the safety or protection of the child or the course of the investigation...

(11) Upon receiving a report of alleged child abuse and neglect, the department or investigating law enforcement agency shall have access to all relevant records of the child in the possession of mandated reporters and their employees.

RCW 70.41.350 EMERGENCY CARE PROVIDED TO VICTIMS OF SEXUAL ASSAULT EMERGENCY CONTRACEPTION

(1) Every hospital providing emergency care to a victim of sexual assault shall:

(a) Provide the victim with medically and factually accurate and unbiased written and oral information about emergency contraception;

(b) Orally inform each victim of sexual assault of her option to be provided emergency contraception at the hospital; and

(c) If not medically contraindicated, provide emergency contraception immediately at the hospital to each victim of sexual assault who requests it.

RCW 70.125.060 PERSONAL REPRESENTATIVE MAY ACCOMPANY VICTIM DURING TREATMENT OR PROCEEDINGS.

If the victim of a sexual assault so desires, a personal representative of the victim's choice may accompany the victim to the hospital or other health care facility, and to proceedings concerning the alleged assault, including police and prosecution interviews and court proceedings

RCW 74.34.020 DEFINITIONS OF VULNERABLE ADULT

(13) "Vulnerable adult" includes a person:

(a) Sixty years of age or older who has the functional, mental, or physical inability to care for himself or herself; or

(b) Found incapacitated under chapter 11.88 RCW; or

(c) Who has a developmental disability as defined under RCW 71A.10.020; or

(d) Admitted to any facility; or

(e) Receiving services from home health, hospice, or home care agencies licensed or required to be licensed under chapter 70.127 RCW; or

(f) Receiving services from an individual provider.

[2003 c 230 § 1; 1999 c 176 § 3; 1997 c 392 § 523; 1995 1st sp.s. c 18 § 84; 1984 c 97 § 8.]

RCW 74.34.035 MANDATORY AND PERMISSIVE REPORTING OF ABUSE OF VULNERABLE ADULTS

(1) When there is reasonable cause to believe that abandonment, abuse, financial exploitation, or neglect of a vulnerable adult has occurred, mandated reporters shall immediately report to the department.

(2) When there is reason to suspect that sexual assault has occurred, mandated reporters shall immediately report to the appropriate law enforcement agency and to the department.

(3) When there is reason to suspect that physical assault has occurred or there is reasonable cause to believe that an act has caused fear of imminent harm:

(a) Mandated reporters shall immediately report to the department; and

(b) Mandated reporters shall immediately report to the appropriate law enforcement agency, except as provided in subsection (4) of this section.

(4) A mandated reporter is not required to report to a law enforcement agency, unless requested by the injured vulnerable adult or his or her legal representative or family member, an incident of physical assault between vulnerable adults that causes minor bodily injury and does not require more than basic first aid, unless:

(a) The injury appears on the back, face, head, neck, chest, breasts, groin, inner thigh, buttock, genital, or anal area;

(b) There is a fracture;

(c) There is a pattern of physical assault between the same vulnerable adults or involving the same vulnerable adults; or

(d) There is an attempt to choke a vulnerable adult…

(6) No facility, as defined by this chapter, agency licensed or required to be licensed under chapter 70.127 RCW, or facility or agency under contract with the department to provide care for vulnerable adults may develop policies or procedures that interfere with the reporting requirements of this chapter.

(7) Each report, oral or written, must contain as much as possible of the following information
(a) The name and address of the person making the report;
(b) The name and address of the vulnerable adult and the name of the facility or agency providing care for the vulnerable adult;
(c) The name and address of the legal guardian or alternate decision maker;
(d) The nature and extent of the abandonment, abuse, financial exploitation, neglect, or self-neglect;
(e) Any history of previous abandonment, abuse, financial exploitation, neglect, or self-neglect;
(f) The identity of the alleged perpetrator, if known; and
(g) Other information that may be helpful in establishing the extent of abandonment, abuse, financial exploitation, neglect, or the cause of death of the deceased vulnerable adult.
(8) Unless there is a judicial proceeding or the person consents, the identity of the person making the report under this section is confidential.

CONSENT AND CONFIDENTIALITY FOR MINORS IN WASHINGTON STATE

SUMMARY FROM SEATTLE KING COUNTY DEPARTMENT OF HEALTH SERVICES
http://www.metrokc.gov/HEALTH/famplan/matureminor.htm - limits

RCW 9.02 REPRODUCTIVE PRIVACY ACT AND STATE V. KOOME, 84 WN.2D901 (1975)

STATUTORY LAW AS WELL AS CASE LAW EXPANDS THE ABILITY OF MINORS TO PROVIDE CONSENT FOR ABORTION, BIRTH CONTROL AND REPRODUCTIVE FUNCTIONS:

- **Abortion, birth control, pregnancy care:** No age requirement for consent to medical care if minor female is capable of giving informed consent. [Reproductive Privacy Act, RCW 9.02 and State v. Koome, 84 Wn.2d901 (1975): right to privacy in matters involving termination of pregnancy and control of one's reproductive functions]
- **Sexually Transmitted Disease/HIV testing**: State law (RCW 70.24.110) indicates that minors 14 years of age and older can consent to diagnosis or treatment of a sexually transmitted disease.

TREATMENT WITHOUT PARENTAL CONSENT REGARDLESS OF AGE MAY ALSO BE GIVEN IN THE FOLLOWING SITUATIONS:

MATURE MINOR RULE
In addition to the above referenced statutes and case law which govern a minor's ability to consent based upon the type of care sought, there is a broader legal concept, the Mature Minor Rule, which gives health care providers the ability to make judgments to treat certain youth as adults based upon an assessment and documentation of the young person's situation. The health care provider may consider the minor's age, maturity, intelligence, training, experience, economic independence, and freedom from parental control in determining mature minor status. [Smith v. Seibly, 72 Wn.2d 16, (1967)].

PRIMARY AGENCY CASE NUMBER	WASHINGTON STATE PATROL – CRIME LABORATORY SYSTEM **REQUEST FOR LABORATORY EXAMINATION**	WSP LABORATORY CASE NUMBER
AGENCY CROSS-REFERENCE NUMBER	**NOTE: SEE REVERSE SIDE OF FORM FOR CRIME LABORATORY LOCATIONS & INSTRUCTIONS FOR USING FORM**	INTER-LAB TRANSFER

HAS OTHER EVIDENCE IN THIS CASE BEEN PREVIOUSLY SUBMITTED TO THIS WSP CRIME LAB? ☐ YES ☐ NO	OFFENSE	DATE OF OFFENSE

SUSPECT(S) – LAST, FIRST, MI (SID #, if available)	**DOB**	**VICTIM(S) – LAST, FIRST, MI** ALSO USE THIS SPACE FOR ELIMINATION PRINTS	**DOB**
1		1	
2		2	
3		3	
4		4	

EXAMINATION REQUESTED BY Can be different from submitter			☐ **RUSH** **COURT DATE:**	
NAME (TYPE OR PRINT) (LAST NAME, FIRST NAME)	RANK/POSITION	BADGE #	SIGNATURE	DATE
AGENCY	STREET ADDRESS	CITY	STATE	ZIP CODE / PHONE

AGENCY ITEM #	ITEM DESCRIPTION	EXAM CODE	SPECIAL INSTRUCTIONS
		FOR LAB USE ONLY AFFIX BARCODE STICKER HERE	

FOR LAB USE ONLY

SUBMITTED BY: (PRINT NAME:—LAST NAME, FIRST NAME)	SIGNATURE	DATE	TIME

SUBMITTAL METHOD:

☐ IN PERSON ☐ UPS # _____ ☐ U.S. CERT. MAIL # _____ ☐ FED EX # ☐ U.S. REG. MAIL #

RECEIVED BY: (PRINT NAME—LAST NAME, FIRST NAME)	SIGNATURE	DATE	TIME

FOR LAB USE ONLY

☐ TOTAL ☐ PARTIAL ☐ TRANSFER TO		☐ TOTAL ☐ PARTIAL ☐ TRANSFER TO	
VIA:	DATE	VIA:	DATE
RELEASED BY:		RELEASED BY:	
RECEIVED BY:	DATE	RECEIVED BY:	DATE
VIA:	DATE	VIA:	DATE
RELEASED BY:		RELEASED BY:	
RECEIVED BY:	DATE	RECEIVED BY:	DATE

RELEASED TO: (PRINT NAME—LAST NAME, FIRST NAME)	SIGNATURE	DATE	TIME

RELEASE METHOD::

☐ IN PERSON ☐ UPS # _____ ☐ U.S. CERT. MAIL # _____ ☐ FED EX # ☐ U.S. REG. MAIL #

RELEASED BY: (PRINT NAME—LAST NAME, FIRST NAME)	SIGNATURE	DATE	TIME

Copy Distribution: WHITE and PINK – To Laboratory YELLOW – Receipt

WSP CRIME LABORATORY LOCATIONS

WSP – Vancouver Crime Laboratory
1401 W Kauffman Ave
Vancouver WA 98660
(360) 993-3800
FAX (360) 993-3899

WSP – Kennewick Crime Laboratory
143302 E Law Ln
Kennewick WA 99337
(509) 734-7022
FAX (509) 734-7025

WSP – Marysville Crime Laboratory
2700 116th St NE Ste P
Marysville WA 98271-9425
(360) 651-6503
FAX (360) 651-6506

WSP – Seattle Crime Laboratory
2203 Airport Way S Ste 250
Seattle WA 98134
(206) 262-6020
FAX (206) 262-6033

WSP – Spokane Crime Laboratory
580 W 7th St
Cheney WA 99004
(509) 625-5401
FAX (509) 625-5440

WSP – Tacoma Crime Laboratory
2502 112th St E
Tacoma WA 98445-5104
(253) 536-4280
FAX (253) 536-4290

WSP – Latent Prints Laboratory
3310 Capitol Boulevard (98501)
PO Box 42608 (98504-2608)
Olympia, WA
(360) 705-5988
FAX (360) 705-5795

INSTRUCTIONS FOR USE

Submit the white and pink copies of this form with your evidence. The yellow copy is your receipt.

NOTE: When submitting evidence in person, keep the yellow copy attached until the form is signed by the receiving laboratory. Clearly identify the agency case number and item number on each evidence package and use the exact numbers on the form. Contact the lab prior to submitting six or more items to discuss and agree on which items to submit and the priority of each item relative to one another.

The shaded areas on the lower half of the form are for laboratory use only.

PRIMARY AGENCY CASE NUMBER: The top space is used for your case number or incident number (what your agency uses to track the case). Submit one agency case number per request. Put case number on your evidence package. The bottom space is used only to cross-reference a related case number or evidence number.

WSP LABORATORY NUMBER: These spaces will be filled in by the receiving laboratory.

AGENCY ITEM#: The individual tracking number or letter designation assigned to each separate item (what your agency uses to identify the item). This is a required entry for evidence control purposes. It must match the agency item # on the evidence package. No duplicate agency item numbers.

ITEM DESCRIPTION: Brief description of each item. Examples are “packet of white powder,” “fired cartridge case,” and “victim’s blue jeans.”

EXAM CODES: This is a guide for possible types of examinations and consists of a letter designation for the general type or functional area of examination requested. These codes are listed below.

NOTE: If the general type for the examination you are requesting is unknown or unlisted, use “OTH” (for other) and fill in the examination you need under “SPECIAL INSTRUCTIONS.”

SPECIAL INSTRUCTIONS: List the specific examination you are requesting. A list of some common examinations is provided with the “EXAM CODES” below. This section can also be used to convey information that would be pertinent to the examination requested.

SUBMITTED BY: This space is filled in by the submitting agency representative who personally delivers or ships the evidence to the laboratory.

SUBMITTAL METHOD: This space will be filled in by the receiving laboratory.

If you have any questions regarding the use of this form, the proper submittal of evidence, or the types of examinations possible, please call the laboratory serving your area.

EXAM CODES	COMMON EXAMINATIONS (for use in SPECIAL INSTRUCTIONS)
BIO/DNA	Biochemistry/DNA Body fluid identification Species determination Bloodstain pattern analysis DNA typing
CHE	Chemical Analysis Fire debris analysis Solid incendiary analysis Explosive analysis Toxic substance analysis Metal analysis Chemical unknown analysis
CLA	Clandestine Laboratory Analysis Clandestine drug analysis Precursor analysis Determination of synthesis route
CON	Controlled Substance Analysis Controlled drug analysis
FDNA	Convicted Offender DNA Databank Convicted offender DNA typing

EXAM CODES	COMMON EXAMINATIONS (for use in SPECIAL INSTRUCTIONS)
F/T	Firearm & Toolmark Examination Bullet comparison Cartridge case comparison Firearm operability Serial number restoration Firing distance determination Toolmark comparison IBIS (Integrated Ballistic Identification System)
MIC	Microanalysis Hair screening Fiber comparison Paint comparison Glass comparison Soil comparison Shoe/tire comparison
QD	Questioned Document Examination Altered document analysis Handwriting comparison Indented writing examination Typewriter/printer/copier comparison
LAT	Latent Print Examination Latent print processing Prints comparison AFIS search IAFIS search
OTH	Other

SECTION TWO

TOXICOLOGY LABORATORY DIVISION

TOXICOLOGY LABORATORY

FORENSIC LABORATORY SERVICES BUREAU – DR. BARRY LOGAN

2203 Airport Way S, Suite 360
Seattle, WA 98134
Telephone: (206) 262-6000
FAX: (206) 262-6018

TOXICOLOGY LABORATORY – MS. ANN MARIE GORDON

2203 Airport Way S, Suite 360
Seattle WA 98134
Telephone: (206) 262-6100
FAX: (206) 262-6145

PREFACE

In July 1999, the Washington State Toxicology Laboratory became a division within the newly formed Forensic Laboratory Services Bureau of the Washington State Patrol. The Washington State Patrol Crime Laboratory formed another division within the same bureau. The Crime Laboratory historically has provided an evidence collection manual and it was appropriate for the Toxicology Laboratory Division to do the same. However, the two laboratories are separate divisions and perform distinct services for the State of Washington. We also are accountable to different accrediting agencies. There may also be cases where specimens are sent to the two separate laboratories. It is important the user recognize that we are distinct and that the appropriate guidelines and requests forms be used for each division.

The Toxicology Laboratory Division handbook is organized to provide the following:

- A description of services provided by the crime laboratories.
- General guidelines for the collection, preservation, and packaging of physical evidence.
- The procedure for submitting physical evidence.

It is not possible for any handbook to be comprehensive for every type of case. The toxicology staff is always available to advise you on any specific or unusual case. You can reach a toxicologist to answer any questions you have at (206) 262-6100.

INTRODUCTION

The State Toxicology Laboratory provides toxicological services to all medical examiners, coroners and law enforcement agencies within the state. The laboratory is located in Seattle. Forensic toxicology answers the question: "Did drug or alcohol use contribute to or cause an individual's death or intoxication?" In support of that effort, the State Toxicology Laboratory provides the following services:

- Performing toxicological examinations of blood, urine and/or other tissues collected during a death investigation, or from living individuals who were either the victim of a crime or were suspected of committing a crime in which drugs and/or alcohol may have played a role. This includes driving under the influence of intoxicating liquors and/or drugs, victims or drug facilitated sexual assault

- Preparing and certifying the simulator solutions and quality assurance solutions for use with the BAC Datamaster, breath test instrument.

- Providing consultation and interpretation for medical examiners and coroners on the results of toxicology analyses in death investigation cases.

- Providing consultation and interpretation for law enforcement agencies and prosecutors on the results of toxicology analyses.

- Providing expert testimony in court trials, hearings, and depositions.

STATE TOXICOLOGY LABORATORY

STATE TOXICOLOGY LABORATORY

The State Toxicology Laboratory in Seattle provides forensic toxicology services for all law enforcement agencies, coroners and medical examiners within the State of Washington. Forensic toxicologists investigate whether drugs were responsible for or contributed to a subject's impairment or death. The laboratory analyzes blood, urine and other fluids or tissues. Refer to the Crime Laboratory Division Physical Evidence Handbook if testing other than toxicological examination is also needed. Requirements for other specimen collections will differ depending on the type of analysis requested.

GUIDELINES FOR SAMPLE SELECTION

Sample Collection Kits AND General Shipping Information:

The State Toxicology Lab provides kits for sample collection, free of charge. The standard DUI/DRE kit contains two, 10 ml gray-top glass vacutainer tubes, cotton padding material, a plastic bag, a polyfoam box, a mailing sleeve and an address label for the State Toxicology Laboratory. This mailer is ready for shipment and it is unnecessary to use any additional packing material or boxes. Doing so will only increase shipping costs. The expiration date of the tubes is stamped on the outside of the polyfoam box and is also on the blood vial label. Please do not obscure the expiration date and the lot control number printed on the blood vial label with any additional label you provide.

Death Investigation kits contain two, 10 mL gray-top glass vacutainer tubes and two, 7 mL red-top vacutainer tubes. The expiration date is not critical and refers only to the warranty of vacuum in the tube. Expired blood tubes may be used for **DEATH INVESTIGATION CASES**, only.

Urine collection cups are also provided by the State Toxicology Laboratory.

To order any of the above, please contact the State Toxicology Laboratory at (206) 262-6100. You need to provide your name, agency, the type and quantity of kits you need and a complete mailing address.

For law enforcement agencies, if you have expired blood kits, we ask that you mail them back to us as we recycle the materials and the expired tubes can be used by coroners and medical examiners in death investigation cases.

If you choose to use any other kit, please ensure that the tubes are 10 mL tubes and that the expiration date is clearly visible and is valid.

For all samples collected:

1. All tubes **must** be labeled with the subject's name. For law enforcement cases, it is advisable to have the phlebotomist and the officer initial and date the label. For chain of custody purposes, it is also desirable to have the officer observe the blood draw and receive the tubes directly from the phlebotomist

2. Please fill the vacutainer tubes completely, whenever possible. Failure to do so may result in an incomplete analysis. IN DEATH INVESTIGATION CASES ONLY: DO NOT OVERFILL THE TUBES. THIS CREATES A BIOHAZARD TO THE ANALYST WHO OPENS THE TUBE. (It is not possible to overfill a vacutainer on a living subject.)

3. Following blood collection, invert Vacutainer tubes 3 to 4 times after blood collection to ensure that the preservative and anticoagulant are completely dissolved.

4. For law enforcement cases, the tube tops should be sealed with tamper evident tape by wrapping the tape around the point at which the glass and the stopper meet. If tamper evident tape is not available, scotch tape may be substituted with the officer's initials and date written across the tape. UNDER NO CIRCUMSTANCES SHOULD HEAVY DUTY CLOTH OR REINFORCED TAPE BE USED. THIS TAPE CREATES A BIOHAZARD TO THE TOXICOLOGY STAFF WHEN THE SAMPLE IS OPENED IN THE LABRATORY.

5. For Death Investigation cases, be sure that the stopper is tight in the tube. Sealing the stopper with tape is advisable but again, DO NOT USE HEAVY DUTY CLOTH OR REINFORCED TAPE. THIS CREATES A BIOHAZARD TO THE ANALYST.

6. Carefully wrap the tubes in the absorbent packing material provided. This material cushions the tubes during shipment and will absorb specimen in the event of leakage. It is not necessary to put tape on the absorbent padding and doing so prevents us from recycling this material. Place the wrapped tubes in the zip-lock style bag provided and seal the bag. For law enforcement cases, we recommend you seal the top of the bag with tamper evident tape. Place the sealed bag containing tubes and absorbent pad into the polyfoam box provided.

7. LAW ENFORCEMENT URINE COLLECTION CUPS: Ensure that the urine cup caps are sealed completely, to prevent leaking in shipment. This is a commonly encountered problem and the entire sample may be lost. ENSURE THE URINE CUP IS LABELED WITH THE SUBJECT'S NAME.

8. Complete the appropriate State Toxicology Laboratory request form. (see Appendix A-D). VERIFY THAT THE REQUEST FORM AND THE SPECIMEN SAMPLES HAVE THE SAME SUBJECT NAME.

9. Enclose the request form and polyfoam box containing the specimen in the mailing sleeve provided.

10. Put your return address in the upper left-hand corner of the box and the State Toxicology Laboratory label in the middle section. Mark the container Clinical Specimen. Specimens may be shipped to the Laboratory by Certified Mail, UPS or First Class Mail (Certified Mail and UPS will provide a delivery record). Alternatively, specimens may be delivered to the Laboratory Monday through Friday between 7:30 a.m. and 4 p.m.

    Please refer questions on sample collection or appropriate containers to the State Toxicology Laboratory at (206) 262-6100.

Driving Under the Influence and DRE samples:

1. Sample volume: Two (10 ml) gray-top vacutainers (approximately 20 ml total volume) of whole blood Tubes should be filled, whenever possible. Submitting partially filled tubes, or using smaller tubes (2, 3, or 5 ml gray top vacutainers) may result in an incomplete report. Each assay performed requires a minimum blood volume and the laboratory may not be able to confirm the presence of some drugs if insufficient sample is submitted. Just because someone appears to be intoxicated, it may not be due to ethanol alone. We try to reserve the second tube if the defendant wants an independent analysis.

   Please **note**: The Toxicology Laboratory receives and maintains quality assurance certificates from the manufacturer of the tubes we provide in our kits. These are sometimes necessary in court to prove that the anticoagulant and preservative were added to the specific lot number of the tubes used in sample collection. If you use tubes from another source, we may not be able to acquire these certificates.

2. In most cases, blood is the appropriate sample to submit. Only blood or breath alcohol test results are admissible in court as per se evidence of intoxication, so when alcohol is suspected, and a legal breath test is not conducted, obtain blood, not urine.

3. If there is a significant delay between the incident and the blood collection (> 2 hours), a urine specimen may also be useful. In general, blood provides better evidence of drug influence than urine, but drugs will be detected for a longer time in urine than blood. For cases in which psilocybin (psychedelic/magic mushrooms) is an expected drug, you must also collect urine as current methods do not permit the analysis of psilocybin in whole blood.

NEVER – submit the vacutainer collection needle or **any** needle with the samples. Asking the nurse or phlebotomist to resheath the needle is subjecting him/her person to unnecessary risks and is against OSHA regulations. In any event, we discard the needle if it arrives with the sample. Similarly, do not submit the betadine wipes or gauze – these are discarded upon receipt.

4. DUI/DRE Toxicology Request Form: See Appendix C. Please complete this form including as much information as you have. The more information you include in your request, the better service we can provide. It may be easier to attach a copy of the investigation report. Always include a telephone number should any questions arise during the analysis. If the sample is a DRE, be certain to INCLUDE the DRE "Face" sheet and, if it is available, the DRE evaluation report.

   DO NOT USE CRIME LAB FORMS OR OTHER TOXICOLOGY LAB FORMS FOR DUI/DRE CASES. FORMS ARE AVAILABLE BY MAIL, FAX OR EMAIL. PLEASE CONTACT THE TOXICOLOGY LABORATORY AT (206) 262-6100 OR toxlab@wsp.wa.gov.

   Please note that the column on the far right hand side of the form is for laboratory use ONLY. Do not complete any information in this box, including information regarding the sealing of evidence, as this must be completed by the laboratory to be in compliance with accreditation requirements. This information verifies the condition of the sample at the time of receipt in the laboratory.

Deceased Subjects

Blood

1. Blood is the most valuable sample for postmortem toxicological testing, and generally 20mL, or two vacutainer tubes will be sufficient for testing. Additional specimens (20mL) should be collected and retained by the coroner or medical examiner in case the initial tubes are damaged or leak. Test results from this sample will generally reflect the amounts of drug present at a given site at the time of death, with some exceptions as discussed later. Most importantly there is a wealth of information in the literature detailing concentrations encountered in therapeutic, toxic or fatal situations, against which new cases can be evaluated.

2. During an autopsy, peripheral and central blood should be collected when the body cavity is opened. Peripheral blood is the specimen of choice and may be drawn from the femoral vein in the leg, the iliac vein, accessible from the body cavity during internal examination, or from the subclavian vein in the chest. Sample sizes of 15 to 20 mL (two tubes) should be adequate for most toxicological testing. Collection of large volumes of blood (greater than 20 mL), can result in movement of the blood between vessels, and mixing of blood in different vessels, unless the vessels are tied off. This is a greater risk at the subclavian vein than the femoral or iliac sites.

3. If an autopsy is not performed, "blind stick" sampling should be avoided. A cut-down procedure to expose the vessel is easily performed with minimal training, to draw an appropriate sample withdrawn. The femoral vein can be readily exposed, to draw a reliable peripheral blood sample. Similarly, the heart can be exposed and the left ventricle reliably identified for collection of central blood. A death investigator can perform this cut down procedure following limited training from a pathologist.

4. Peripheral blood is generally the most reliable specimen for toxicological testing, since it is less susceptible to postmortem changes.

Urine

1. Urine is a very useful specimen for drug testing in a postmortem setting, and should, if available, be collected and sent to the lab. Urine is resistant to postmortem changes and can indicate prior drug ingestion after drugs are no longer detectable in the blood. Even small quantities of urine are readily analyzed by automated immunoassay techniques. A significant amount of screening testing can be performed on less than a milliliter of urine, so even small amounts should be collected and submitted to the Toxicology Laboratory.

2. Urine should not be collected by blind stick through the abdomen into the bladder, since this can be hit and miss. A simple incision can allow visualization of the bladder and any available urine can be readily collected with a syringe. Generally, 10 to 15 mL of urine are sufficient for comprehensive toxicology testing.

3. Urine should be collected in two 7mL red top tubes. There is some evidence that sodium fluoride can interfere with immunoassay drug tests for benzodiazepines.

Vitreous/aqueous humor

1. The fluid in the eyeball should be routinely collected (all available fluid should be collected, typically 3-5mL in each eyeball). It is more than 98% water, and any drugs present in the blood will eventually equilibrate in the vitreous. Note that in the case of death following acute drug ingestion however, the concentration of drugs in the vitreous will likely be low or negative.

2. Vitreous is a particularly useful sample for testing for alcohol when there is any decomposition, since the eye as an enclosed organ is generally more resilient to microorganism infestation than other tissues. Vitreous can also be tested for electrolytes, including potassium, and glucose.

3. Vitreous should be collected with a hypodermic syringe by inserting the needle into the eye. Each eye will contain about 3mL of vitreous fluid.

4. Other tissues:

   Liver, Cerebrospinal fluid, gastric contents, other tissues and maggots can be useful specimens for analysis depending upon the circumstances of the case.

   Specific information on the collection and submission of these samples can be found in the Coroner's and Medical Examiner's Manual. Whenever a death may involve unusual circumstances or unusual drug(s), it is advisable to contact the State Toxicology Laboratory staff for guidance in sample collection. It is not possible for any manual to anticipate all circumstances and a phone call can facilitate the collection of more appropriate samples in unique situations.

   Please refer all questions to the State Toxicology Laboratory at (206) 262-6100.

5. Death Investigation Toxicology Request Form: See Appendix A. Please complete this form including as much information as you have. The more information you include in your request, the better service we can provide. It may be easier to attach a copy of the death investigation report. Always include a telephone number should any questions arise during the analysis.

   DO NOT USE CRIME LAB FORMS OR OTHER TOXICOLOGY LAB FORMS FOR DEATH INVESTIGATION CASES. FORMS ARE AVAILABLE BY MAIL, FAX OR EMAIL. PLEASE CONTACT THE TOXICOLOGY LABORATORY AT (206) 262-6100 OR toxlab@wsp.wa.gov.

6. Please note that the column on the far right hand side of the form is for laboratory use ONLY. Do not complete any information in this box, including information regarding the sealing of evidence as this must be completed by the laboratory to be in compliance with accreditation requirements. This information verifies the condition of the sample at the time of receipt in the laboratory.

Drug Facilitated Sexual Assaults:

What is a 'Date Rape Drug'?

The term 'date rape drug' usually refers to a sedative, which is administered by an acquaintance, to an unsuspecting person to obtain non-consensual sex. The drug is often mixed with an alcoholic beverage, which when consumed, causes varying degrees of sedation ranging from drowsiness through to unconsciousness, and amnesia. In these cases, alcohol works synergistically with these drugs to enhance their sedative effect.

Throughout the United States, there has been an increase in the number of rape and sexual assault victims reporting an associated loss of memory and difficulty with recollection of events. Common symptoms reported by victims range from confusion, disorientation and drowsiness, to reduced inhibition and impaired judgment, to lack of muscle control, impaired memory and loss of consciousness. All these circumstances are consistent with a drug-facilitated sexual assault.

Which Drugs Are Used?

Despite the media identifying Rohypnol and Gamma-HydroxyButyrate (GHB) as the main date-rape drugs, studies have shown that many other drugs are commonly implicated (Table 1).

Table 1: Substances allegedly involved in drug-facilitated sexual assault cases

Substance	General Use
Ethanol	Recreational
Benzodiazepines *	Sedative / Hypnotic
Gamma HydroxyButyrate	Sedative / Hypnotic
Barbiturates, and Chloral hydrate	Sedative / Hypnotic
Marijuana, Cocaine, and Opiates	Recreational / Drug of abuse
Methamphetamine / Ecstasy	Recreational / Drug of abuse
Ketamine (Ketalar®)	Anesthetic / Drug of abuse
Scopolamine (Donnatal®)	Pre-anesthetic / Motion sickness
Diphenhydramine (Benadryl®)	Antihistamine
Carisoprodol (Soma®), Meprobamate (Miltown®)	Muscle relaxant
Cyclobenzaprine (Flexeril®)	Muscle relaxant

* Benzodiazepines include alprazolam (Xanax®), chlordiazepoxide (Librium®), diazepam (Valium®), flunitrazepam (Rohypnol®), flurazepam (Dalmane®), lorazepam (Ativan®) and triazolam (Halcion®).

Most of these drugs are either central nervous system depressants, which impair consciousness and memory, or drugs which function to lower a person's inhibitions. Victims of sexual assaults commonly report symptoms, which correspond to the administration of such substances. Many of these drugs are also odorless, tasteless and colorless, and can be surreptitiously administered into food and beverage quite easily.

Ethanol: The drug most frequently involved in sexual assaults is ethanol. Ethanol can cause all stages of central nervous system depression, from paradoxical disinhibition with increased sociability, to sedation, amnesia, and even unconsciousness at high doses. When used in combination with other central nervous system depressants, the effects of ethanol are exacerbated.

Benzodiazepines: Despite the media's attention to Rohypnol, ***any*** benzodiazepine may be used in an attempt to incapacitate a victim. Benzodiazepines are the most widely and frequently prescribed sedative and night-time hypnotic drugs used throughout the world, and are subsequently readily available.

When mixed with ethanol, the sedative effects of benzodiazepines are enhanced. Incapacitation may arise even when small doses are combined with small amounts of alcohol.

Following a single oral dose of Rohypnol, very low blood concentrations are reached, and blood is usually negative within 4 - 8 hours. However, its metabolite can be detected in urine within 24-60 hours. Common street-names for Rohypnol include 'Roofies,' 'Roofinol,' 'Ropies,' 'Ruffies,' and 'Roches.'

Gamma-Hydroxybutyrate: GHB is a central nervous system depressant and also a naturally occurring substance. It is now federally a Schedule I substance in the United States. GHB can be obtained in the form of a clear liquid, white powder or white tablets. It is easily synthesized from common ingredients, with recipes available on the Internet.

GHB is abused by body builders as an alternative to anabolic steroids, and is used recreationally for its intoxicating effects such as euphoria, reduced inhibitions and sedation. It is also marketed as an anti-aging drug and as a weight-loss drug. Common street-names for GHB include 'Liquid Ecstasy', 'Liquid X', 'Grievous Bodily Harm', 'Georgia Home Boy', 'G' and 'Scoop.' It is important to realize that legally available substances such as 1,4-Butanediol and 2(3H)-Furanone di-hydro (a.k.a. GBL – gamma butyrolactone) convert rapidly to GHB within the human body.

At low doses, GHB causes a reduction of social inhibitions similar to that seen with alcohol, as well as drowsiness, euphoria, confusion and amnesia. At high doses, symptoms include seizure-like activity, hallucinations, severe respiratory depression, unconsciousness, and profound coma. GHB's onset of action is very rapid - within 10-20 minutes - and the duration of its effects is usually ~ 3-5 hours. It is rapidly eliminated from the body and is undetectable in blood after 6-8 hours, and in urine after 10-12 hours, depending on the dose.

Blood

Blood should always be collected, in particular, if the patient presents within 24 hours of the incident or if the patient appears sedated and/or intoxicated. Collect the blood in two, 10 mL gray-top vacutainer tubes containing a preservative and an anticoagulant) 20 mL total blood). Specimens should be refrigerated until transported to the laboratory.

Urine

Urine is usually the specimen of choice for drug facilitated sexual assaults because it provides the longest window of detection. The sooner a urine specimen is collected and refrigerated after the alleged event, the greater the chance of detecting drugs which may have been used. Many of the drugs used are quickly eliminated from the body.

A ***50 mL urine*** specimen should be obtained as soon after the incident as possible, or at least within 96 hours.

Proper labeling and documentation of all specimen containers needs to be ensured, including details of the victim's name, date and time of collection, and approximate time after the alleged assault, where known.

Please refer all questions to the State Toxicology Laboratory at (206) 262-6100.

Drug Facilitated Sexual Assault Toxicology Request Form: See Appendix B. Please complete this form including as much information as you have. The more information you include about the incident, in your request, the better service we can provide. Always include a telephone number should any questions arise during the analysis.

DO NOT USE CRIME LAB FORMS OR OTHER TOXICOLOGY LAB FORMS FOR DRUG FACILTATED SEXUAL ASSAULT CASES. FORMS ARE AVAILABLE BY MAIL, FAX OR EMAIL. PLEASE CONTACT THE TOXICOLOGY LABORATORY AT (206) 262-6100 OR toxlab@wsp.wa.gov.

Please note that the column on the far right hand side of the form is for laboratory use ONLY. Do not complete any information in this box, including information regarding the sealing of evidence, as this must be completed by the laboratory to be in compliance with accreditation requirements. This information verifies the condition of the sample at the time of receipt in the laboratory.

TOXICOLOGY LABORATORY
APPENDIX

The following four pages are copies of the Washington State Toxicology Laboratory Request Forms. These forms can be obtained electronically by emailing your request to toxlab@wsp.wa.gov. Hard copies can be obtained by calling the State Toxicology Laboratory at (206) 262-6100. Please note that the column on the right hand side of the form is for "Laboratory Use Only".

Appendix A – Death Investigation – Request for Analysis

Appendix B – Drug Facilitated Sexual Assault – Request for Analysis

Appendix C – Driving Under the Influence/DRE – Request for Analysis

Appendix D – L.C.B/Drug Investigation – Request for Analysis

Washington State Toxicology Laboratory - Washington State Patrol

2203 Airport Way S., Ste 360
Seattle, WA 98134-2027
Phone: (206) 262-6100
Fax: (206) 262-6145
e-mail: toxlab@wsp.wa.gov

Death Investigation – Request for Analysis

Subject's Information: (Please print clearly)

Name: _____
Last First Mi

Age: _____ **Sex** **M:** ☐ **F:** ☐

Date Sent: ____/____/____ **Date of Death:** ____/____/____

Agency Case # _____ County _____

Sent By: Name: _____ Phone: ( )

Send Results To: Name: _____

Agency: _____

Address: _____

City: _____ State: _____ Zip: _____

Suspected Manner of Death: Pending Tox: **Y** ☐ **N** ☐

Natural ☐ **Accident** (non traffic) ☐ **Undetermined** ☐

Homicide ☐ **Traffic Accident** ☐ **Suicide:** ☐ Drug Related ☐ Other

Medical History: brief description of the incident and attach copy of the investigation report.

Drugs Suspected: list observations, drug history, prescriptions, etc…

Sample Information:

Specimen	Collected
Central Blood	___
Peripheral Blood	___
Urine	___
Gastric	___
Bile	___
Vitreous	___
Liver	___
CSF	___

Analysis Requested:

Blood Alcohol Only: ☐ Blood ethanol always performed
Vitreous Alcohol Only: ☐ Performed if blood is pos
Carbon Monoxide: ☐
Drug Screen: Urine ☐
Drug Screen: Blood ☐ Performed if urine is pos

Other: (Specify) _____

Was the subject **embalmed** before the samples were taken? Y ☐ N ☐
State of **decomposition**: **None** ☐ **Early** ☐ **Moderate** ☐ **Advanced** ☐

Chain of Custody: (signature required)

From: _____ To: _____ Date: _____
From: _____ To: _____ Date: _____
From: _____ To: _____ Date: _____

Comments:

Laboratory Use Only
Laboratory #

Date: _____

Analyst: _____

Specimens Received:

☐ Blood
___ ml _____
☐ Blood Peripheral
___ ml _____
☐ Urine
___ ml _____
☐ Vitreous
ml
☐ Liquid
___ _____
☐ Serum
ml
☐ Other: Please list

Evidence sealed Y ☐ **N** ☐
☐ Box sealed
☐ Bag sealed
☐ Tubes sealed
Samples leaked Y ☐ **N** ☐

☐ 1st Class
☐ UPS
☐ Certified
☐ Registered
☐ Fed Ex
☐ Hand Delivered

Form #

Washington State Toxicology Laboratory - Washington State Patrol

Drug Facilitated Sexual Assault – Request for Analysis

2203 Airport Way S., Ste 360
Seattle, WA 98134-2027
Phone: (206) 262-6100
Fax: (206) 262-6145
e-mail: toxlab@wsp.wa.gov

Victim's Information: (Please print clearly)

Name: _____
Last First Mi

Age: _____ **Sex** **M:** ☐ **F:** ☐

Agency Case # _____ County _____

Sent By: Name: _____ Phone: ( )

Send Results To: Name: _____

Agency: _____

Address: _____

City: _____ State: _____ Zip: _____

Alleged Incident Date: _____ Time: _____ am / pm

Specimen Collection Date: _____ Time: _____ am / pm

Case History: **Detailed** description of the incident **and** attach copy of the investigation report.

Drugs Suspected: list symptoms, observations, drug history, prescriptions, etc…

Sample Information:

Specimen	Collected	Sent
Urine	Y ☐ N ☐	Y ☐ N ☐
Blood	Y ☐ N ☐	Y ☐ N ☐
Serum	Y ☐ N ☐	Y ☐ N ☐
_____	Y ☐ N ☐	Y ☐ N ☐

Chain of Custody: (signature required)

From: _____ To: _____ Date: _____

From: _____ To: _____ Date: _____

From: _____ To: _____ Date: _____

Comments:

Laboratory Use Only
Laboratory #

Date:

Analyst: _____

Specimens Received:

☐ Blood
____ ml _____

☐ Blood Peripheral
ml

☐ Urine
____ ml _____

☐ Serum
ml

☐ Liquid
____ ml _____

☐ Other: Please List

Evidence sealed Y ☐ **N** ☐
☐ Box sealed
☐ Bag sealed
☐ Tubes sealed

Samples leaked Y ☐ **N** ☐

☐ 1st Class

Form #TL03 rev 07-01

Washington State Toxicology Laboratory - Washington State Patrol

Driving Under the Influence/DRE – Request for Analysis

2203 Airport Way S., Ste 360
Seattle, WA 98134-2027
Phone: (206) 262-6100
Fax: (206) 262-6145
e-mail: toxlab@wsp.wa.gov

Subject's Information: (Please print clearly) DRE Training or Certification Y ☐ N ☐

Name: _____
Last First Mi

Date of Birth: _____/_____/_____ **Sex**: **M** ☐ **F** ☐ **DUI** ☐ **DRE** ☐ Evaluator: _____

Date Sent: _____/_____/_____ **Date of Incident / Arrest:** _____/_____/_____

Agency Case # _____ County _____

Sent By: Name: _____ Phone: ( )

Send Results To: Name: _____

Agency: _____

Address: _____

City: _____ State: _____ Zip: _____

Traffic Information: Accident? Y ☐ N ☐ Vehicular Homicide? Y ☐ N ☐

Driver ☐ **Passenger** ☐ **Pedestrian** ☐ **Other** ☐ _____

Number of vehicles? 1 ☐ **2** ☐ **3 or more** ☐

Was medical treatment given prior to blood draw? Y ☐ If yes, list any drugs:

Case History: brief description of the incident and attach copy of the investigation report/DRE Face Sheet:

Drugs Suspected: list symptoms, observations, drug history, prescriptions, etc.

Medications and illegal drugs of abuse suspect admits having taken:

Sample Information:

Speci	Collec	Sent
Blood	_____	_____
Urine	_____	_____
Serum	_____	_____

Analysis Requested:
Blood Alcohol Only: ☐
Drug Screen:
Blood ☐ Urine ☐
Other: (Specify)
_____

DRE Opinion: (check box)
- ☐ CNS Depressants
- ☐ CNS Stimulants
- ☐ Hallucinogens
- ☐ Phencyclidine
- ☐ Narcotic Analgesics
- ☐ Inhalants
- ☐ Cannabis

Chain of Custody: (signature required)

From: _____ To: _____ Date: _____

From: _____ To: _____ Date: _____

From: _____ To: _____ Date: _____

Comments:

Laboratory Use Only
Laboratory #

Date:

Analyst:_____

Specimens Received:
- ☐ Blood
  ____ ml _____
- ☐ Blood Peripheral
  ____ ml _____
- ☐ Urine
  ____ ml _____
- ☐ Serum
  ____ ml _____
- ☐ Liquid
  ml
- ☐ Other: Please List

Evidence sealed Y ☐ **N** ☐
- ☐ Box sealed
- ☐ Bag sealed
- ☐ Tubes sealed

Samples leaked Y ☐ **N** ☐

- ☐ 1st Class
- ☐ UPS
- ☐ Certified
- ☐ Registered
- ☐ Fed Ex
- ☐ Hand Delivered

Form #TL02 rev 07-01

Washington State Toxicology Laboratory - Washington State Patrol

L.C.B/Drug Investigation – Request for Analysis

2203 Airport Way S., Ste 360
Seattle, WA 98134-2027
Phone: (206) 262-6100
Fax: (206) 262-6145
e-mail: toxlab@wsp.wa.gov

Subject's Information: (Please print clearly)

Name: _____
Last First Mi

Date of Birth: _____/_____/_____ **Sex:** M F

Date Sent: _____/_____/_____ **Date of Incident / Arrest:** _____/_____/_____

Agency Case # _____ **County** _____

Sent By: Name: _____ Phone: ( )

Send Results To: Name: _____

Agency: _____

Address: _____

City: _____ State: _____ Zip: _____

Liquor Control Board: brief description of the incident: (Samples Analyzed for Ethanol content only)

Drug Investigation Case History: brief description of the incident and attach copy of the investigation report:

Drugs Suspected: list symptoms, observations, drug history, prescriptions, etc.

Medications and illegal drugs of abuse suspect admits having taken:

Sample Information:

Specimen	Collected	Sent
Blood		
Urine		
Serum		

Analysis Requested:

Blood Alcohol Only:

Drug Screen:
Blood Urine

Other: (Specify)

_____

Chain of Custody: (signature required) Also: Please Print Name

From: _____ To: _____ Date: _____

From: _____ To: _____ Date: _____

From: _____ To: _____ Date _____

Comments:

Laboratory Use Only
Laboratory #

Date:

Analyst:_____

Specimens Received:

Blood
____ ml _____

Blood Peripheral
____ ml _____

Urine
ml

Serum
____ ml _____

Liquid
ml

Other: Please List

Evidence sealed Y N
Box sealed
Bag sealed
Tubes sealed

Samples leaked Y N

1st Class
UPS
Certified
Registered
Fed Ex
Hand Delivered

Form # TL06 – rev 09-04